United Kingdom Testing and Certification

Test Report

Project ID: 20210723-000714

United Kingdom Testing & Certification Ltd
Cairnmuir House, Cairnmuir Road
East Kilbride, G74 4GY

Trusted to Ensure.

ilac-MRA

UKAS TESTING

21542

Change History

Issue Date	Version	Created by	Description of change
	A	DF	Initial Issue

Signatories

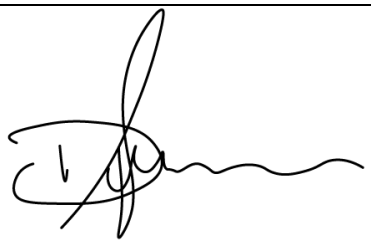	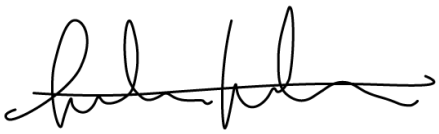
Authorised Daniel Fitzsimmons* Testing Manager	Checked Andrew Hutchison MEng AMIMechE* Head of Technical Services

*For and on behalf of United Kingdom Testing and Certification.

Table of Contents

1 Test Summary 6

1.1 Test Details 6
1.2 Test Basis 6
1.3 Expression of Results 7
1.3.1 Specimen A 7
1.3.2 Specimen B 7
1.3.3 Specimen C 8
1.3.4 Specimen D 8

2 Test Construction and Specimen(s) 9

2.1 Summary 9
2.2 Specimen(s) Verification 9
2.3 Specimen(s) Installation and Fixity 9
2.4 Sampling 9

3 Pre-test Examination 10

3.1 Gap Measurements 10
3.1.1 Specimen A 10
3.1.2 Specimen B 11
3.2 Closing Force Measurements 12
3.3 Operability 12
3.4 Self-closing 12
3.5 Final Setting 12

4 Test Procedure 13

4.1 Heating Conditions 13
4.2 Pressure Conditions 15
4.3 Environmental Conditions 16
4.4 Unexposed Surface Temperature 17
4.4.1 Specimen A 17
4.4.2 Specimen B 18
4.4.3 Specimen C 19

United Kingdom Testing and Certification is a trading style of United Kingdom Testing & Certification Limited. Registered company number SC654601

4.4.4 Specimen D 20
4.5 Deflection 21
4.5.1 Specimen A 21
4.5.2 Specimen B 21

5 Specimen Behaviour 23

5.1 Observations 23

6 Limitations 25

6.1 Field of Application 25
6.2 Asymmetrical Test Specimens 25
6.3 Accuracy of Results 25

Appendix A 26

A.1 Schedule of Components 26
A.1.1 Specimen A 26
A.1.2 Specimen B 33
A.1.3 Specimen C 40
A.1.4 Specimen D 41
A.1.5 Supporting Construction 42
A.2 General Arrangement 43
A.3 Vertical Sections – Specimen A & B 44
A.4 Horizontal Sections – Specimen A & B 45
A.5 Fire Stopping Detail Specimen A & B 46
A.6 Sections through of Specimen C & D 47
A.7 Instrumentation 48

Appendix B 49

B.1 Unexposed Surface Temperature Measurements 49
B.2 Deflection Measurements 61

Appendix C 62

C.1 Sample Report 62

United Kingdom Testing and Certification is a trading style of United Kingdom Testing & Certification Limited. Registered company number SC654601

1 Test Summary

1.1 Test Details

Test Sponsor	BritChem Ltd
Sponsor Address	Unit 6 Beehive Business Park, Smithies Lane Heckmondwike WF16 0NF
Date of Test	22 November 2021

1.2 Test Basis

The test was carried out in accordance with BS EN 1634-1: 2014 + A1: 2018 with additional guidance of BS EN 1366-4: 2021 as instructed by the test sponsor and employed the following standard methods.

BS EN 1363-1: 2020	Fire resistance tests – Part 1: General requirements.
BS EN 1634-1: 2014 + A1: 2018	Fire resistance and smoke control tests for door and shutter assemblies, openable windows and elements of building hardware- Part 1: Fire resistance test for door and shutter assemblies and openable windows.
BS EN 1363-2: 1999 § 8	Fire resistance tests – Part 2: Alternative and additional procedures.
BS EN 1366-4: 2006 +A1:2010 excluding Annex B	Fire resistance tests for service installations – Part 4: Linear joint seals

United Kingdom Testing and Certification is a trading style of United Kingdom Testing & Certification Limited. Registered company number SC654601

1.3 Expression of Results

1.3.1 Specimen A

	Discrete Area	Performance Criteria	Result (mins)
Integrity[1]		Sustained Flaming (> 10 s)	30 minutes**
		Gap Gauge (Ø6 mm)	30 minutes**
		Gap Gauge (Ø25 mm)	30 minutes**
		Cotton Pad	28 minutes
Insultation[2]	Door Leaf	Mean Temperature Rise (ΔT > 140 °C)	28 minutes*
		Max Temperature Rise (ΔT >180 °C)	28 minutes*
	Door Frame	Max Temperature Rise (ΔT > 360 °C)	28 minutes*

1.3.2 Specimen B

	Discrete Area	Performance Criteria	Result (mins)
Integrity[3]		Sustained Flaming (> 10 s)	60 minutes**
		Gap Gauge (Ø6 mm)	60 minutes**
		Gap Gauge (Ø25 mm)	60 minutes**
		Cotton Pad	59 minutes
Insultation[4]	Door Leaf	Mean Temperature Rise (ΔT > 140 °C)	59 minutes*
		Max Temperature Rise (ΔT >180 °C)	59 minutes*
	Door Frame	Max Temperature Rise (ΔT > 360 °C)	59 minutes*

* By virtue cotton pad failure.

** No longer able to be evaluated by virtue of an area of the specimen being blanked off.

[1] The time(s) in completed minutes for which the test specimen(s) continues to maintain its separating function without: a) causing ignition to the cotton pad applied in accordance with EN 1363-1:2020 § 10.4.5.2 b) permitting the penetration of a gap gauge as specified in EN 1363-1:2020 § 10.4.5.3 c) resulting in sustained flaming.

[2] The time(s) in completed minutes for which the test specimen(s) continues to maintain its separating function without developing temperatures on its unexposed surface which: a) increase the average temperature above the initial average temperature by more than 140 °C; b) increase at any location (including the roving thermocouple) above the initial average temperature by more than 180°C with the exception that the limit for temperature rise for any frame member or transom member adjacent to the leaf/leaves of the doorset or openable window shall be 360°C.

[3] The time(s) in completed minutes for which the test specimen(s) continues to maintain its separating function without: a) causing ignition to the cotton pad applied in accordance with EN 1363-1:2020 § 10.4.5.2 b) permitting the penetration of a gap gauge as specified in EN 1363-1:2020 § 10.4.5.3 c) resulting in sustained flaming.

[4] The time(s) in completed minutes for which the test specimen(s) continues to maintain its separating function without developing temperatures on its unexposed surface which: a) increase the average temperature above the initial average temperature by more than 140 °C; b) increase at any location (including the roving thermocouple) above the initial average temperature by more than 180°C with the exception that the limit for temperature rise for any frame member or transom member adjacent to the leaf/leaves of the doorset or openable window shall be 360°C

1.3.3 Specimen C

	Performance Criteria	Result (mins)
Integrity[5]	Sustained Flaming (> 10 s)	69 minutes*
	Cotton Pad	69 minutes*
Insultation[6]	Max Temperature Rise (ΔT >180 °C)	69 minutes*

1.3.4 Specimen D

	Performance Criteria	Result (mins)
Integrity[7]	Sustained Flaming (> 10 s)	69 minutes*
	Cotton Pad	69 minutes*
Insultation[8]	Max Temperature Rise (ΔT >180 °C)	69 minutes*

*The test duration.

[5] The time(s) in completed minutes for which the test specimen(s) continues to maintain its separating function without: a) causing ignition to the cotton pad applied in accordance with EN 1363-1:2020 § 10.4.5.2 b) resulting in sustained flaming.
[6] The time(s) in completed minutes for which the test specimen(s) continues to maintain its separating function without developing temperatures on its unexposed surface which: a) increase at any location (including the roving thermocouple) above the initial average temperature by more than 180°.
[7] The time(s) in completed minutes for which the test specimen(s) continues to maintain its separating function without: a) causing ignition to the cotton pad applied in accordance with EN 1363-1:2020 § 10.4.5.2 b) resulting in sustained flaming.
[8] The time(s) in completed minutes for which the test specimen(s) continues to maintain its separating function without developing temperatures on its unexposed surface which: a) increase at any location (including the roving thermocouple) above the initial average temperature by more than 180°.

2 Test Construction and Specimen(s)

2.1 Summary

Supporting Construction:	100 mm thick flexible standard supporting construction pursuant to BS EN 1363-1: 2020 § 7.2, comprising of 50 mm thick steel stud faced either side with two layers of 12.5 mm think Gyproc fireline board.
Specimen A:	Single acting single leaf timber door assembly
Specimen B:	Single acting single leaf timber door assembly
Specimen C:	Vertical linear joint with MDF to steel stud substrate
Specimen D:	Horizontal linear joint with MDF to steel stud substrate

Items 33 to 35 were provided by United Kingdom Testing and Certification.

Items 1 to 32 were provided by the Test Sponsor.

Please refer to page 26 for full details of these items.

2.2 Specimen(s) Verification

United Kingdom Testing and Certification carried out a comprehensive survey to verify the information provided by the Test Sponsor. This included verifying the materials, dimensions, and manufacturing methodologies of the test specimen(s) wherever possible. Refer to page 26 for full details of this survey.

2.3 Specimen(s) Installation and Fixity

The Specimen(s) were installed into the test construction by United Kingdom Testing and Certification. Specimen A was installed such that the door leaf toward the heating conditions at the request of the Test Sponsor.

Specimen A was installed such that the door leaf toward the heating conditions at the request of the sponsor.
Specimen B was installed such that the door leaf toward the heating conditions at the request of the sponsor.
Specimen A was centrally latched prior to the commencement of the test at the request of the test sponsor.
Specimen B was centrally latched prior to the commencement of the test at the request of the test sponsor.

2.4 Sampling

The acrylic sealant (Items 5, 17, 26, 30) was sampled on 17 August 2021 by a representative of IFC Certification on behalf of Britchem Limited prior to delivery. Please refer to page 62 for the sample report.

3 Pre-test Examination

3.1 Gap Measurements

The primary gaps were measured on the exposed face of the specimen(s) prior to the commencement of the test. The results were recorded on a Test History Record. A summary of these measurements is presented below.

3.1.1 Specimen A

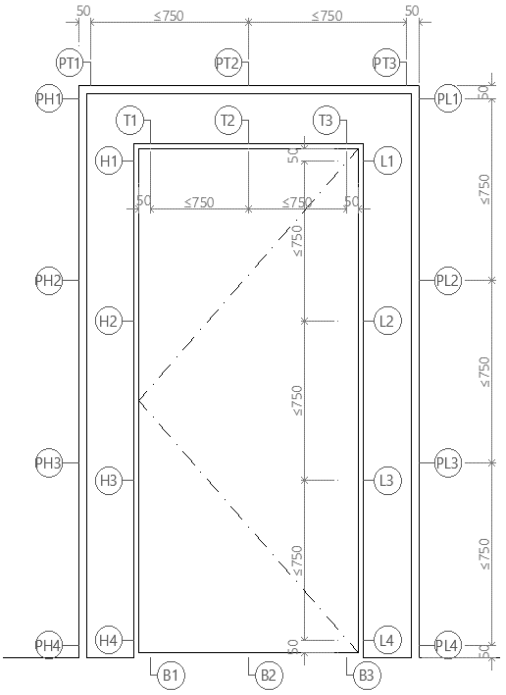

	Primary	Leaf to Stop
H1	2.9	0.0
H2	3.0	0.0
H3	3.0	0.0
H4	2.0	0.0
Mean	2.8	
Max	3.0	
Max Permitted	4.9	

	Primary	Leaf to Stop
L1	2.9	0.0
L2	3.3	0.0
L3	3.5	0.0
L4	2.5	0.0
Mean	3.0	
Max	3.5	
Max Permitted	5.2	

	Primary	Leaf to Stop
T1	2.58	0
T2	3.43	0
T3	3	0
Mean	3.0	
Max	3.4	
Max Permitted	5.2	

	Primary	Leaf to Stop
B1	5.17	*
B2	4.74	*
B3	6.01	*
Mean	5.3	
Max	6.0	
Max Permitted	7.7	

PH1	20.0	PL1	21.8	PT1	15.4
PH2	19.9	PL2	21.5	PT2	14.5
PH3	22.5	PL3	19.8	PT3	17.8
PH4	27.5	PL4	14.8		

*Measurements not required.

3.1.2 Specimen B

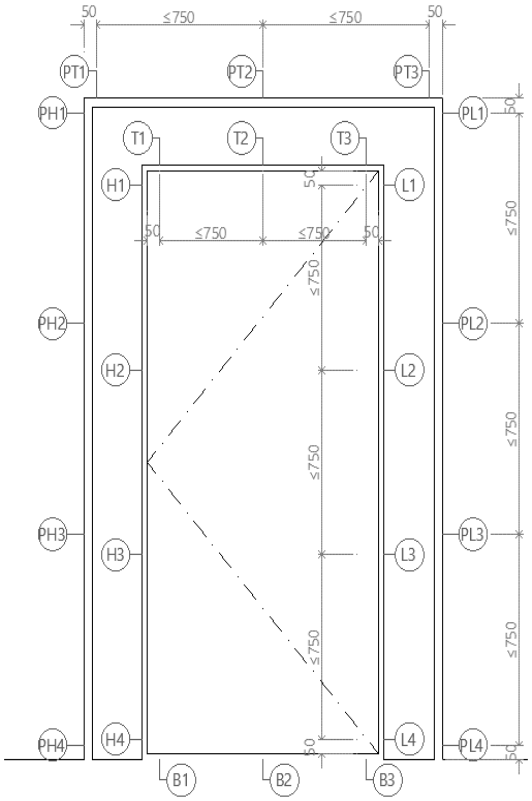

	Primary	Leaf to Stop
H1	4.0	1.8
H2	2.9	2.2
H3	2.6	1.5
H4	2.2	0.0
Mean	2.9	
Max	4.0	
Max Permitted	5.5	

	Primary	Leaf to Stop
L1	2.1	0.0
L2	2.5	0.0
L3	2.3	0.8
L4	2.5	1.6
Mean	2.3	
Max	2.5	
Max Permitted	4.4	

	Primary	Leaf to Stop
T1	3.8	2.5
T2	4.3	1.4
T3	5.0	0.0
Mean	4.3	
Max	5.0	
Max Permitted	6.7	

	Primary	Leaf to Stop
B1	6.8	*
B2	5.1	*
B3	5.7	*
Mean	5.9	
Max	6.8	
Max Permitted	8.4	

PH1	20.7	PL1	19.3	PT1	12.0
PH2	18.7	PL2	23.8	PT2	11.0
PH3	17.2	PL3	27.1	PT3	10.6
PH4	13.1	PL4	27.6		

*Measurements not required.

3.2 Closing Force Measurements

The door closing forces of the specimen(s) were measured three times and recorded on a Test History Record. A summary of these measurements is presented below.

Measurement	Average Recorded Force (N)	Distance from Pivot to Measurement Location (mm)	Moment (Nm)
Closing Force Specimen A	67.0	0.750	50.3
Opening Force Specimen A	26.0	0.750	19.5
Closing Force Specimen B	78.0	0.750	58.5
Opening Force Specimen B	36.8	0.750	27.6

3.3 Operability

The specimen(s) were cycled in accordance with BS EN 16034:2014 § A.2.2.

3.4 Self-closing

A self-closing test was conducted on the specimen(s) in accordance with BS EN 16034:2014 § A.4.1

3.5 Final Setting

Final setting of the specimen(s) was carried out in accordance with BS EN 1634-1:2014 + A1:2018 § 10.1.4.

United Kingdom Testing and Certification is a trading style of United Kingdom Testing & Certification Limited. Registered company number SC654601

4 Test Procedure

4.1 Heating Conditions

The specimen(s) were subject to heating conditions in accordance with BS EN 1363-1:2020 § 5.1. This was monitored and controlled for the duration of the test using eight type K thermocouples which were distributed across a vertical plane 100 ± 50 mm from the exposed face of the test construction.

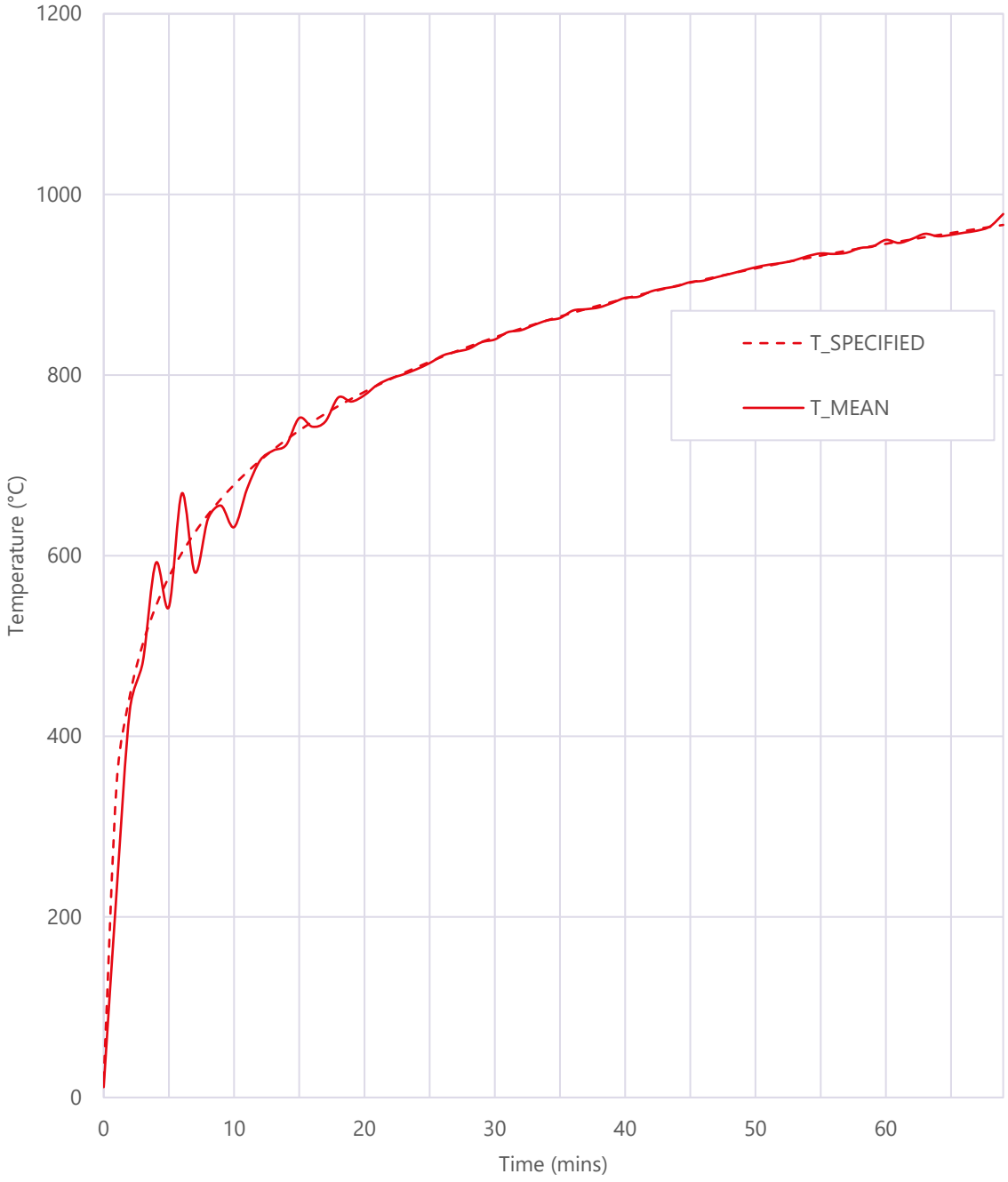

Figure 4-1

The percentage deviation of the resulting time-temperature curve has been evaluated against the standard time-temperature curve in accordance with EN 1363-1:2020 § 5.1.2.

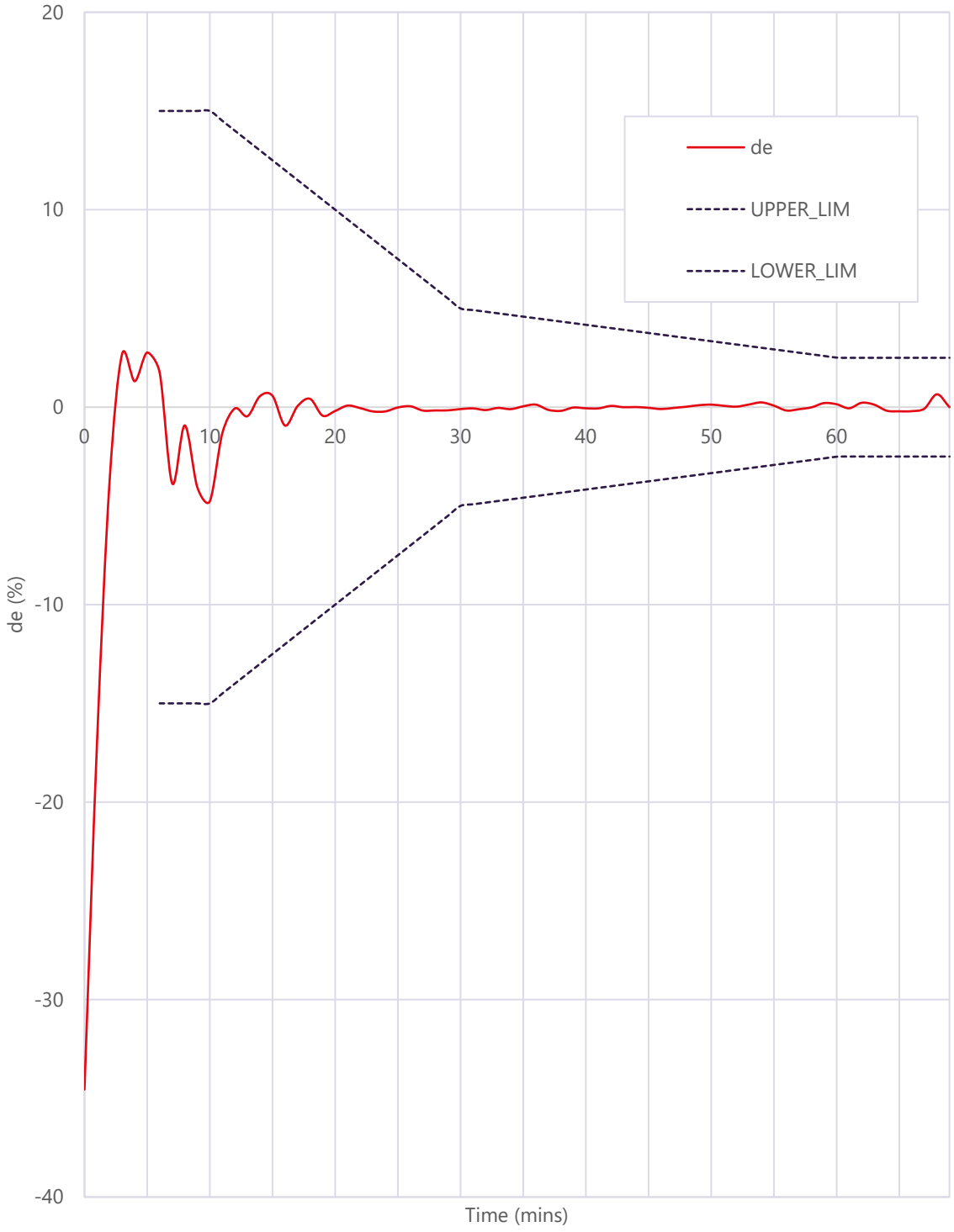

Figure 4-2

4.2 Pressure Conditions

The specimen(s) were subject to a pressure regime in accordance with EN 1363-1:2020 § 5.2. The calculated pressure differential relative to the laboratory atmospheric pressure at a height of 365, 1612 and 2850 mm from the furnace floor level was –1.1, 9.4 and 20.0 Pa respectively which equates to 0 Pa at a height of 1000 mm from the furnace floor level and 15 Pa at the centre of Specimen C and D. The furnace was maintained at these pressures within ±3 Pa five minutes after the commencement of the test and for the remainder of the test duration.

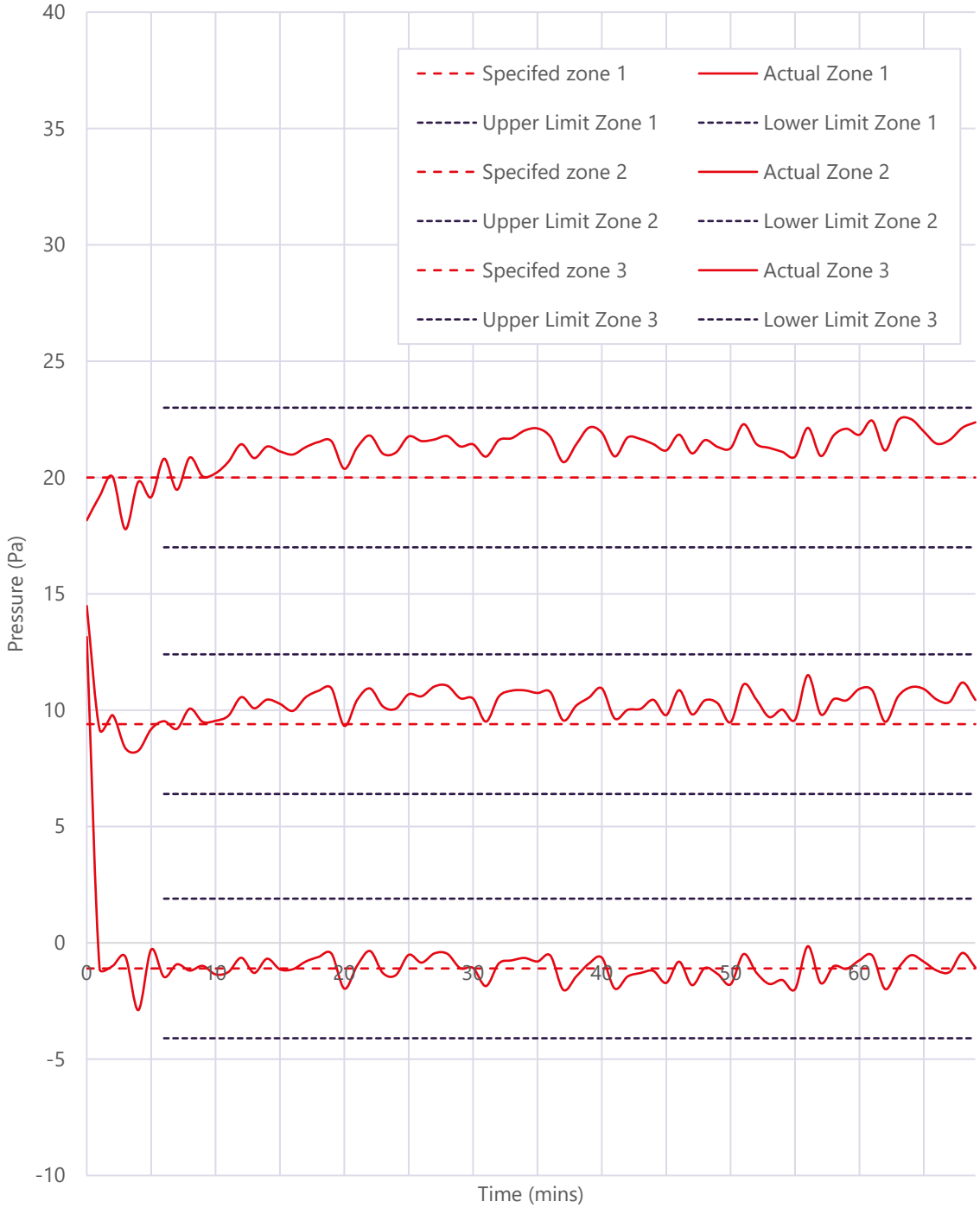

Figure 4-3

4.3 Environmental Conditions

The ambient temperature prior to the commencement of the test was 8.7ºC. The Average Furnace Temperature prior to the commencement of the test was 8.0 °C. The ambient temperature immediately after the test was 10.5 ºC.

United Kingdom Testing and Certification is a trading style of United Kingdom Testing & Certification Limited. Registered company number SC654601

4.4 Unexposed Surface Temperature

A roving thermocouple was available for the temperature measurement of any localised hot areas that were not monitored by surface thermocouples and any measurements using it were noted on a Test Observation Record. Please refer to page 23 for details of measurements recorded by the roving thermocouple.

Disc thermocouples were affixed to the unexposed surface of the specimen(s) in accordance with EN 1363-1:2020 § 9.1.2 to measure and monitor the maximum and the mean temperature rise of the unexposed face of the specimen(s) for the duration of the test. Refer to page 49 for full details of temperatures recorded.

4.4.1 Specimen A

	Allocated Thermocouple(s)
ΔT_{MAX} and ΔT_{AVE}	TC 1, 2, 3, 4, 5
ΔT_{MAX}	TC 6, 7, 8, 9, 10, 11, 12, 13, 14, 15, 16, 17

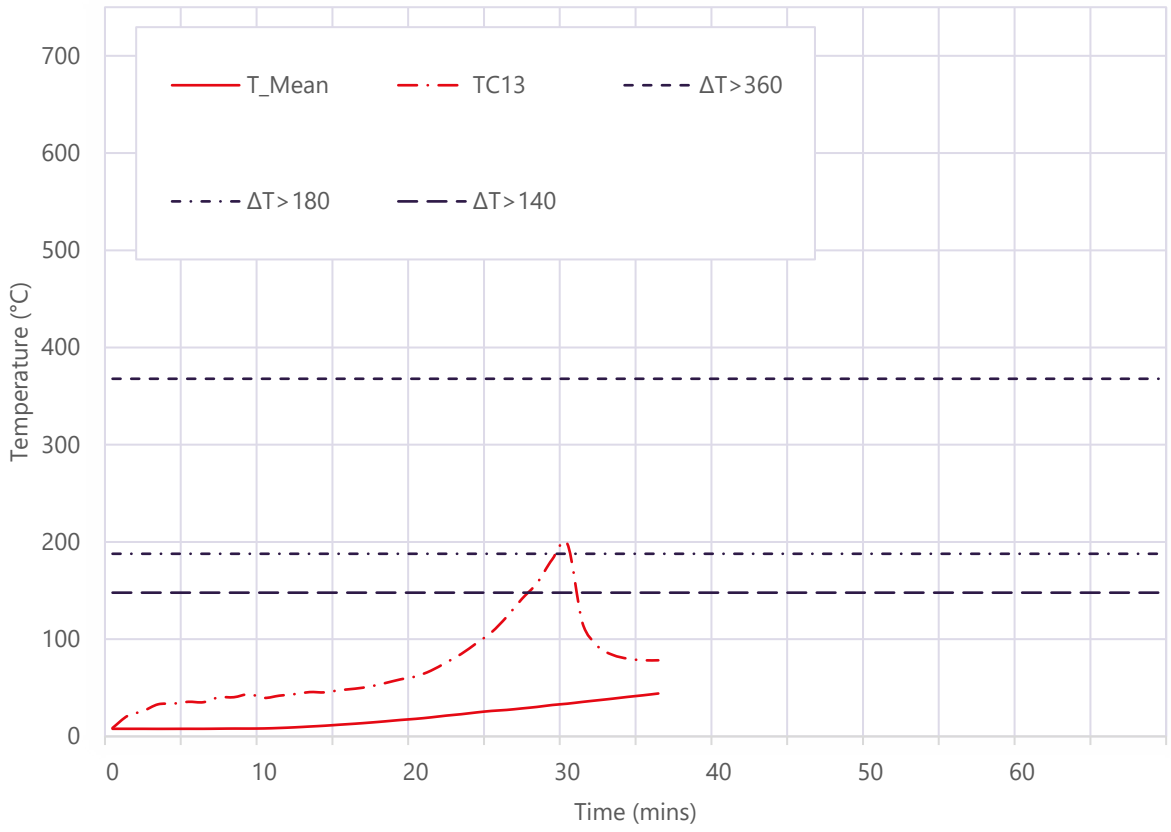

Figure 4-4

4.4.2 Specimen B

	Allocated Thermocouple(s)
ΔT_{MAX} and ΔT_{AVE}	TC 18, 19, 20, 21, 22
ΔT_{MAX}	TC 23, 24, 25, 26, 27, 28, 29, 30, 31, 32, 33, 34

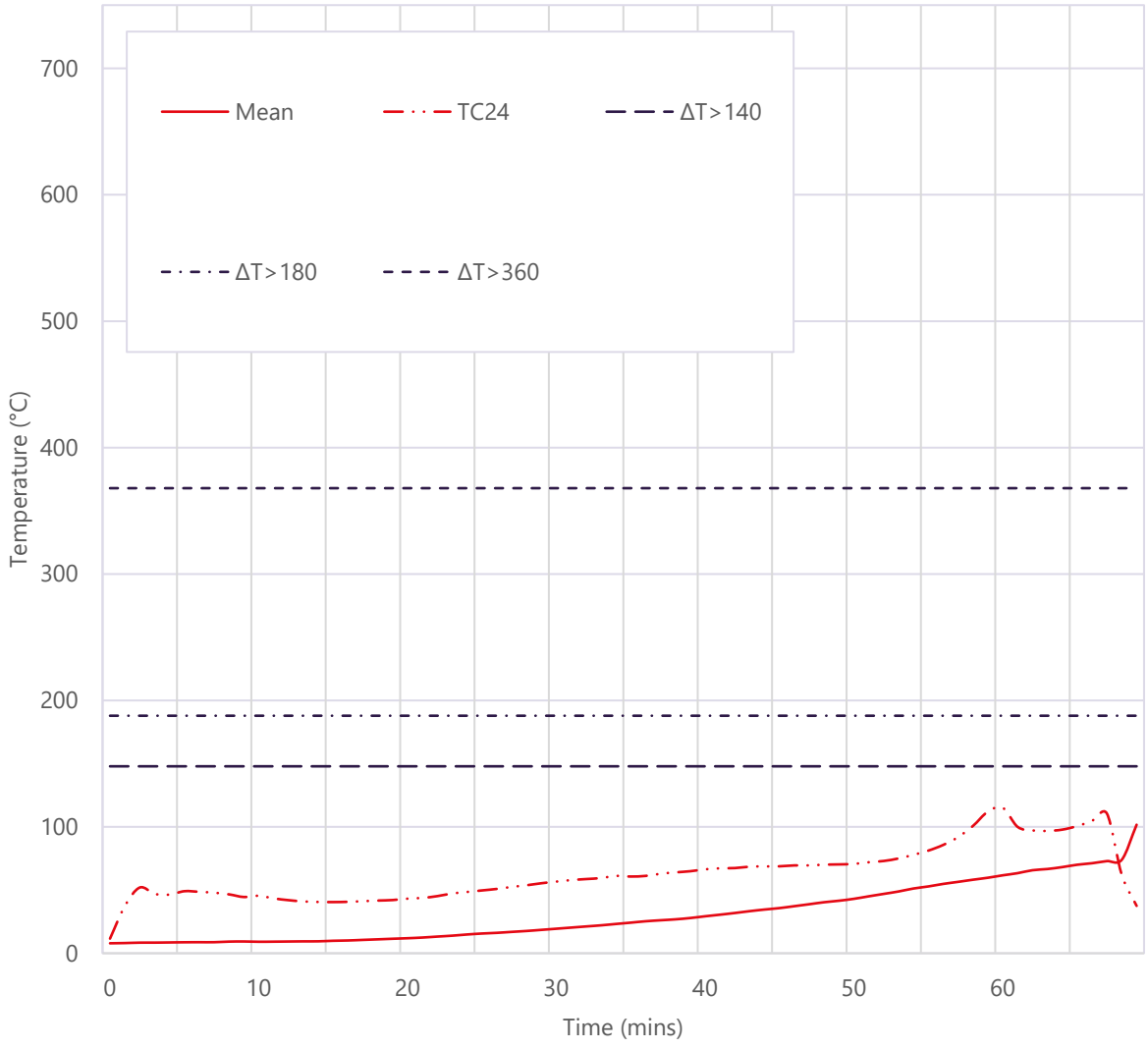

Figure 4-5

4.4.3 Specimen C

	Allocated Thermocouple(s)
ΔT_{MAX}	TC 42, 43, 44, 45, 46, 47, 48

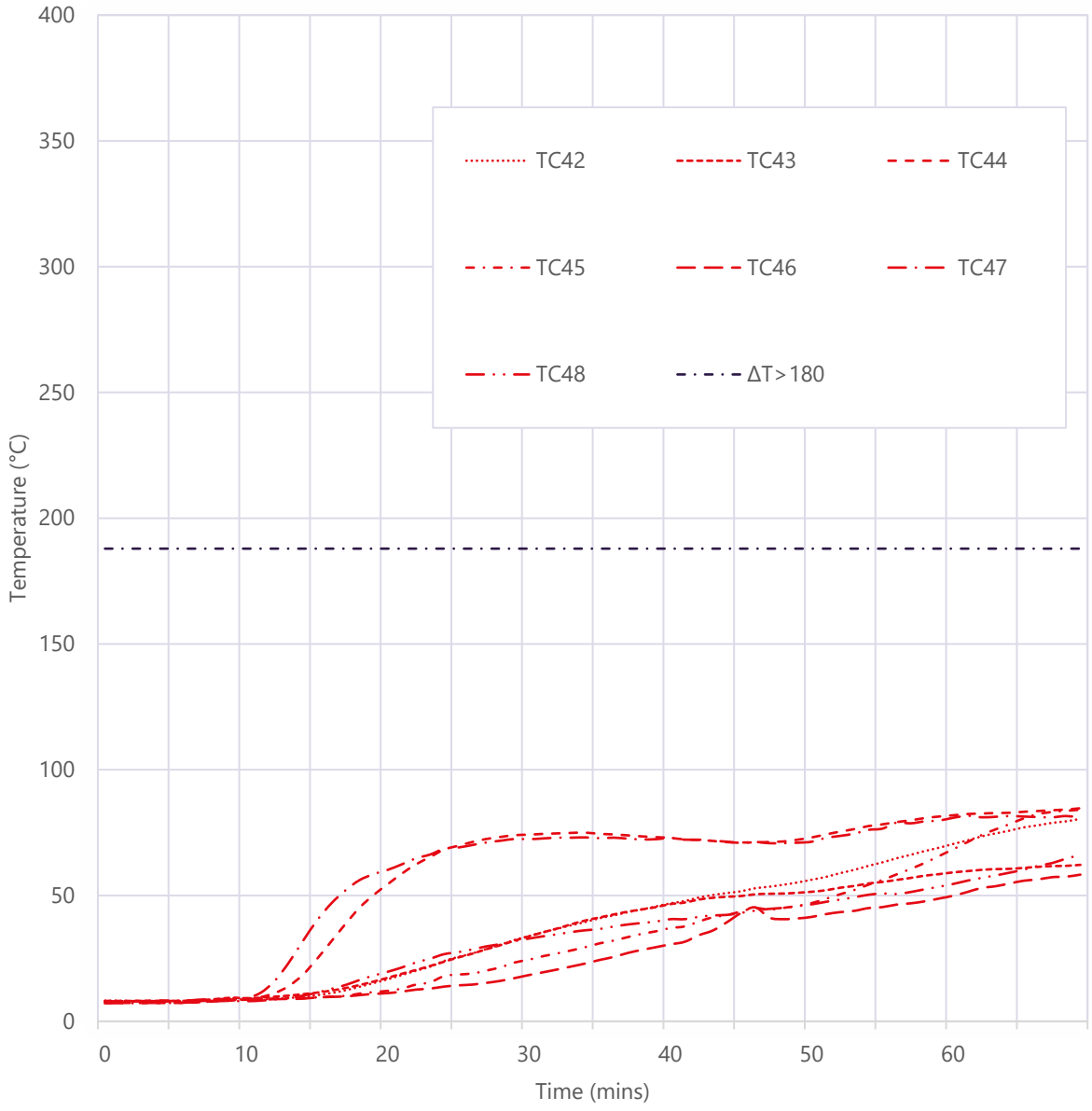

Figure 4-6

4.4.4 Specimen D

	Allocated Thermocouple(s)
ΔT_{MAX}	TC 35, 36, 37, 38, 39, 40, 41

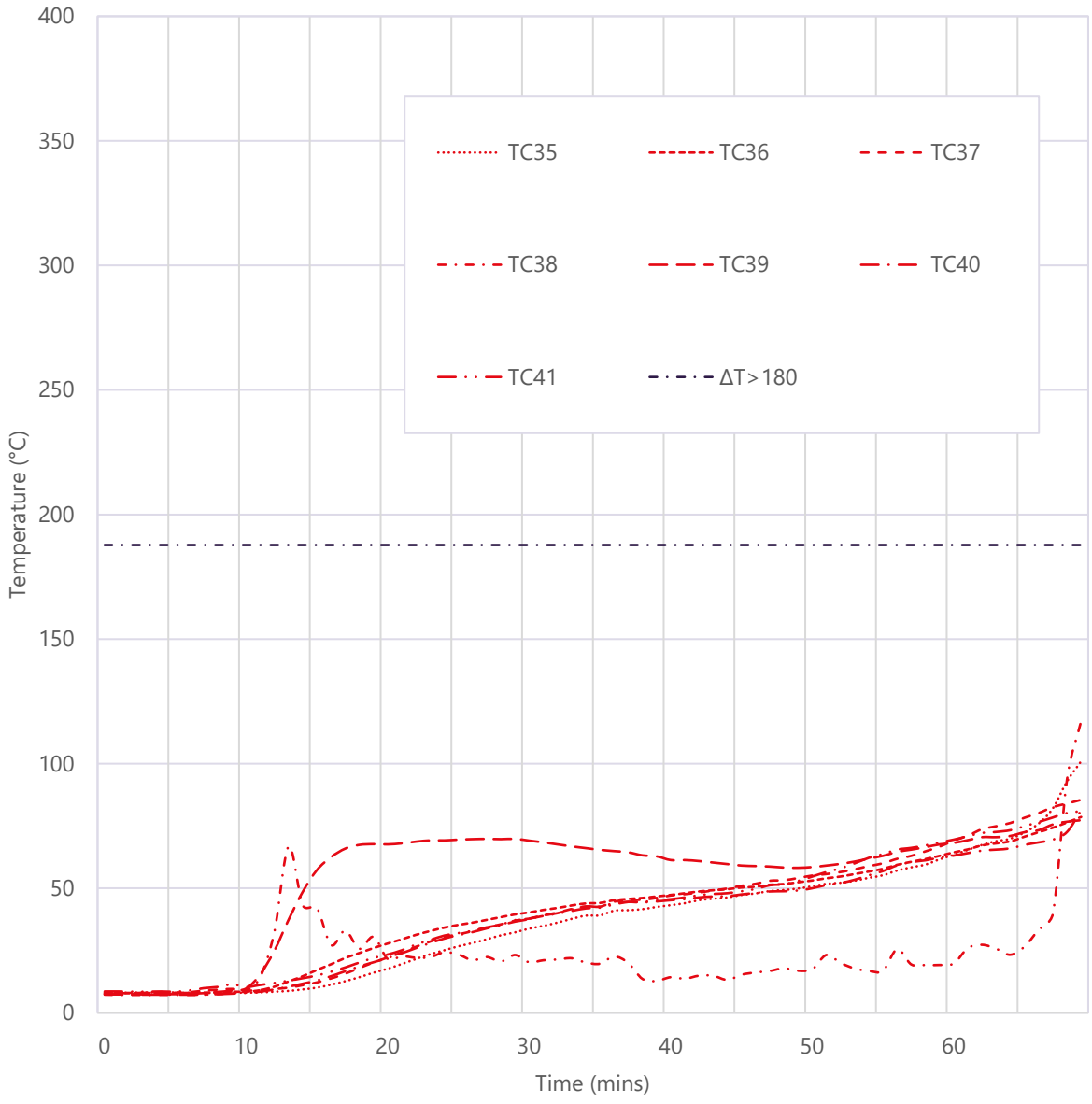

Figure 4.7

4.5 Deflection

A levelling line laser was installed parallel to the specimens to provide a fixed datum for the measurement of deflection in accordance EN 1363-1: 2020 § Annex G. Measurements were recorded throughout the test at regular intervals and recorded on a Deflection Measurement Record.

4.5.1 Specimen A

Positive values indicate movement toward the heating conditions.

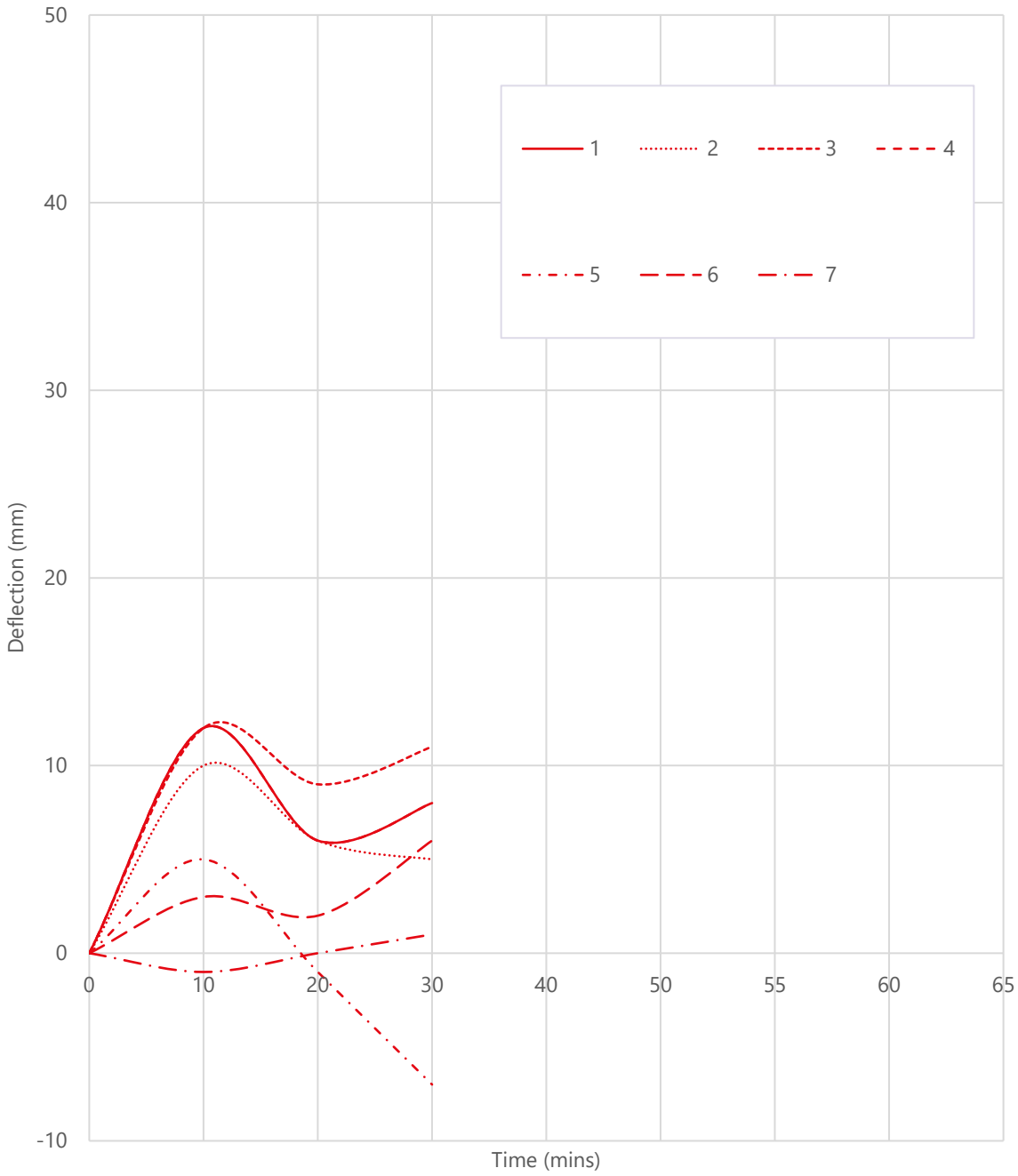

Figure 4-8

4.5.2 Specimen B

Positive values indicate movement toward the heating conditions.

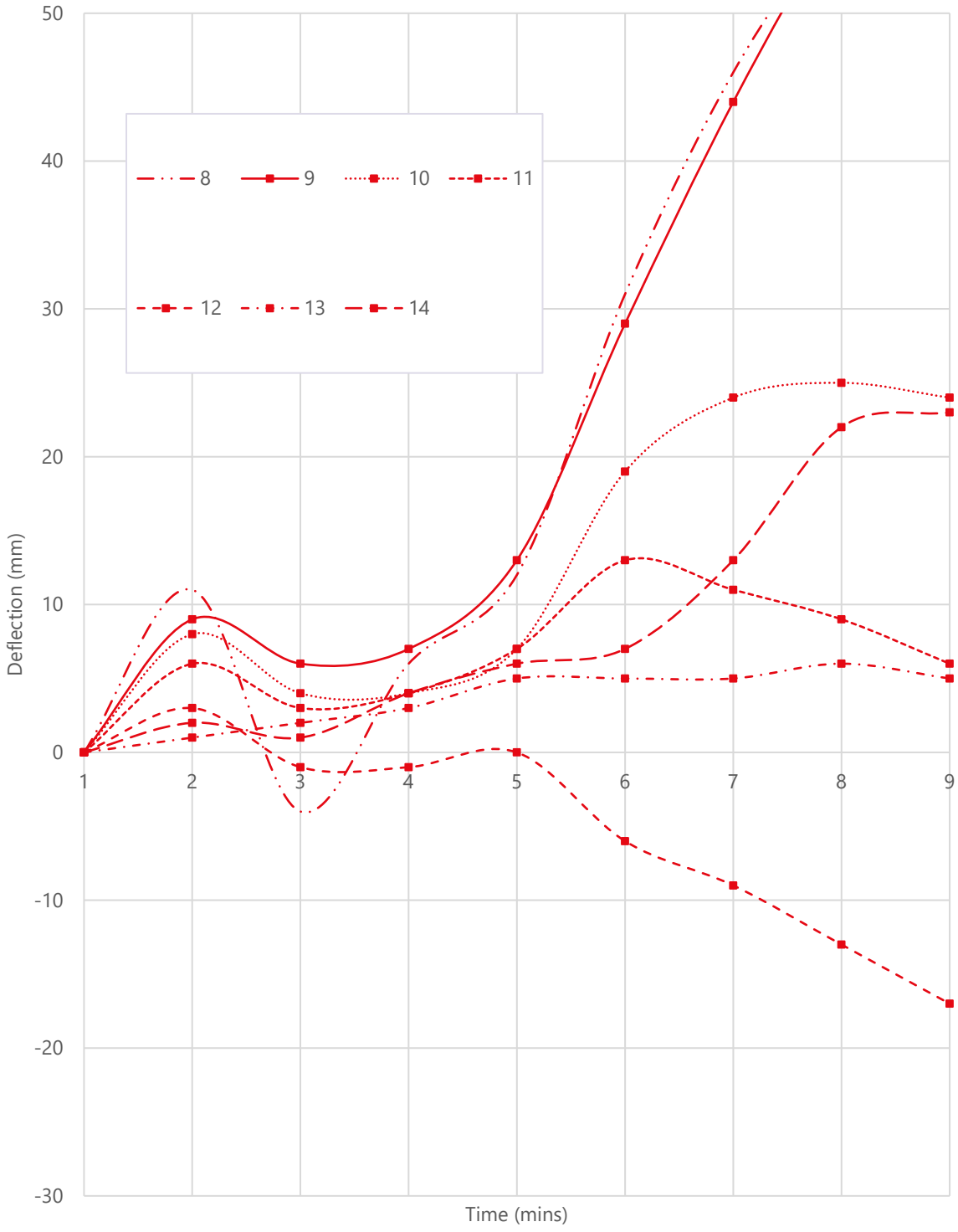

Figure 4-9

5 Specimen Behaviour

5.1 Observations

Observations relating to the general behavior of the specimen(s) were made for the duration of the test and recorded on a Test Observations Record. A summary of these observations is presented below.

Specimen	Time			E[9]	U[10]	Observation
	Hrs	Mins	Secs			
	00	00	00			**The test commences.**
A+B	00	02	30		x	Steam/smoke release is observed along the head.
B	00	03	46		x	Steam/smoke release along the hanging edge.
A+B	00	05	00	x		Both leaves have ignited.
A+B+C+D	00	07	50	x		The sealant is observed to have expanded.
A+B	00	12	58	x		Handles have melted away.
A	00	16	16		x	Steam/smoke release issues around the handleset as mild discolouring of the leaf is observed.
A	00	25	00		x	Discolouring of the leaf at the latch position.
B	00	26	27		x	Discolouring at the head towards the hanging edge.
A	00	27	00		x	Orange glowing is observed at latch position.
A	**00**	**28**	**00**		**x**	**Cotton pad integrity test is performed above the latch position. Pad ignited. Cotton pad integrity and by virtue insulation failure is deemed to have occurred.**
A	**00**	**30**	**00**		**x**	**Flickers of flame issue at latch area. The area is blanked off to allow the test to continue for the purposes of observing the perimeter sealant. Gap gauge and sustained flaming integrity criteria is no longer able to be evaluated.**
A	00	32	00		x	Small crack in perimeter sealant is observed forming approximately 50mm up the leading-edge side of the doorset.
A	**00**	**36**	**00**		**x**	**Doorset blanked off. No signs of sustained flames or emissions of hot gasses from the perimeter sealant were observed.**
B	00	58	00		x	An orange coloured glowing is observed at top of the hanging edge.

[9] Viewed from exposed face of specimen
[10] Viewed from unexposed face of specimen

Specimen	Time			E[11]	U[12]	Observation
	Hrs	Mins	Secs			
B	00	58	37		x	Flickers of flame issue along head.
B	**00**	**59**	**00**		**x**	**Cotton pad integrity test is performed at the top corner of the hanging edge. Pad ignited. Cotton pad integrity and by virtue insulation failure is deemed to have occurred.**
B	**1**	**00**	**00**		**x**	**The head of the door leaf is blanked off to allow the test to continue for the purposes of observing the perimeter sealant. Gap gauge and sustained flaming integrity criteria is no longer able to be evaluated.**
A+B+C+D	1	07	00		x	The supporting construction is beginning to show signs of discolouring and degrading.
	1	**09**	**00**			**The test is discontinued at the clients request.** **No signs of sustained flames or emissions of hot gasses from the perimeter sealant were observed from specimens B+C+D for the test duration.**

[11] Viewed from exposed face of specimen
[12] Viewed from unexposed face of specimen

6 Limitations

6.1 Field of Application

This report details the method of construction, the test conditions and the results obtained when the specific element of construction described herein was tested following the procedure outlined in EN 1363-1, and where appropriate BS EN 1363-2. Any significant deviation with respect to size, constructional details, loads, stresses, edge or end conditions other than those allowed under the field of direct application in the relevant test method is not covered by this report and should be the subject to design appraisal by a competent individual.

BS EN 1634-1: 2014 + A1: 2018 § 13 and EN 1366-4: 2021 § 13 provides guidance on the field of direct application of results. The permissible variations included in this guidance can be applied automatically without the need for the sponsor to seek additional evaluation, calculation, or approval.

6.2 Asymmetrical Test Specimens

Specimens A and B were asymmetrical and were tested such that the door leaves opened towards the heating conditions. The test results may not be appropriate to applications where the door leaves open away from the heating conditions.

6.3 Accuracy of Results

Because of the nature of fire resistance testing and the consequent difficulty in quantifying the uncertainty of measurement of fire resistance, it is not possible to provide a stated degree of accuracy of the result.

No statement of conformity with the testing specifications is made or implied in this report. However, measurement results are reviewed, where applicable, to establish where measurement results exceed the control parameters established in the relevant fire resistance test standard.

United Kingdom Testing and Certification is a trading style of United Kingdom Testing & Certification Limited. Registered company number SC654601

Appendix A

A.1 Schedule of Components

All dimensions are in millimetres (mm) unless otherwise stated.

Legend	
*	Information provided by the Test Sponsor. Not verified by United Kingdom Testing and Certification
**	Nominal value
***	Information is commercial in confidence. Full details retained on file by United Kingdom Testing and Certification

A.1.1 Specimen A

1. Door frame	
Manufacturer	SA Joinery
Reference	FD30
Material	European Red Wood Head and Jambs
Density	510[13] kg/m^3
Moisture content	12 - 14%*
Overall size	930 mm x 2040 mm
Frame (Head)	70 mm wide x 42 mm thick with 27 mm wide x 15 mm deep rebate
Frame (Jambs)	70 mm wide x 42 mm thick with 27 mm wide x 15 mm deep rebate
Jamb to Head jointing method, fixing detail and location	Stub Tenon @ 16 mm x 16 mm x 32mm fixed with 5 Ømm X 100 mm Wood Screws no. 2 on each head to jamb connection
Stop to Frame jointing method, fixing detail and location	N/a
Presence of Adhesives	N/a

[13] Wood Species Database: Redwood, European | TRADA

2. Frame Fixing Method to Supporting Construction	
Manufacturer	SPAX International GmbH & CO. KG
Type & material	Single Thread Screws & Hardened Steel
Overall size	5 Ømm x 80 mm long
Spacing	150 mm from top corner of jamb, 150 mm from bottom corner of jamb and at no more than 600 mm centres
Does the fixing penetrate intumescent seal within frame reveal	No
Packing Material	Certitek PVC U Shims
Packing Material Dimension	101 mm x 43 mm assorted thicknesses
Packing Material Location	At each fixing location

3. Intumescent to frame reveal	
Quantity	1
Manufacturer	Firestop Manufacturing
Reference	Fire Only Seal
Material	Graphite encased in Pvc
Overall section size	15 mm wide x 4 mm thick
Application method	Self-adhesive
Location (relative to the opening face of the door leaf)	Intumescent centrally fitted to reveal
Presence of Adhesives	N/a (other than self-adhesive strips)

United Kingdom Testing and Certification is a trading style of United Kingdom Testing & Certification Limited. Registered company number SC654601

4. Frame to supporting construction fire stopping detail	
Manufacturer	Saint-Gobain
Reference	Isover Insulation
Material	Mineral Wool
Overall dimension	50 mm
Application method	Compression fitted

5. Sealant to fire stopping detail	
Manufacturer	Britchem Limited
Reference	FR Acrylic Sealant
Material	Acrylic Sealant
Overall section size	10 mm deep x various widths given in section 3.1
Application method	Using a cartridge gunned
Location	Gaps between the head and jambs and supporting construction

6. Door Leaf	
Manufacturer (blank)	SA Joinery
Reference	Streboard FD30
Quantity of leaves on door set	1
Glazing location relative to the head and closing edge	N/a
Overall leaf size supplied for testing	857 mm wide x 2000 mm high x 54 mm thick

United Kingdom Testing and Certification is a trading style of United Kingdom Testing & Certification Limited. Registered company number SC654601

7. Core element	
Manufacturer	Falcon Panel Products
Reference	Strebord 54
Material	Graduated Density Chipboard
Density	530-630 kg/m^3*
Overall thickness and reduced thickness if door leaf incorporates fielded areas	54 mm thick

8. Lipping's / Edge banding	
Manufacturer	S A Joinery
Reference	Door Lipping
Material	Hardened Sapele
Density	640 kg/m^3*
Moisture content	13%*
Overall size	54 mm wide x 8 mm thick x 2000 mm long
Fixing method	Adhesive
Location	Vertical edges only
Adhesives	Yes
Manufacturer	ARO-BOND
Type	MCPU
Reference	947
Curing method	Flush Trim
Application method	Damp cloth over area apply PU with Spatula
Presence of Mechanical Fixings	No

United Kingdom Testing and Certification is a trading style of United Kingdom Testing & Certification Limited. Registered company number SC654601

9. Hinges	
Supplier	Royde & Tucker
Reference	RT HI-LOAD 102
Quantity	3
Primary material	Zinc Plate
Type	Triple Knuckle Hinge
Size	
I. knuckle	14Ø mm x 90 mm high
II. Blades	100 mm high x 88 mm wide x 3 mm thick
Fixings	
I. Type	Wood Screws
II. Material	Stainless Steel
III. Sizes	5Ø mm x 32 mm long
IV. Number off per blade	5
Position of each hinge relative to the head of the leaf	225 mm, 975 mm & 1725 mm
Details of intumescent protection	HP102 intumescent hinge pads
Interruptions to Intumescent within the frame reveal	Fully Interrupted

United Kingdom Testing and Certification is a trading style of United Kingdom Testing & Certification Limited. Registered company number SC654601

10. Latch	
Manufacturer	Eurospec
Reference	TLS8030SC
Material	
I. Forend plate	Satin Chrome
II. Latch bolt	Stainless Steel
Overall sizes	
I. Forend plate	60 mm high x 25 mm wide x 1.5 mm thick
II. Back case	77 mm Long x 34 Wide x 17 mm thick
III. Latch bolt	30 mm wide x 17 mm projection
Fixing method	2 No. Wood screws at 5 Ømm x 20mm
Operation of latch bolt	90° CW turn / Unlatched
Details of intumescent protection	
I. Forend plate	1 mm Interdens
II. Interruptions to Intumescent within the frame reveal	Fully Interrupted
Location of centre of the spindle relative to the bottom of the leaf	Centre of the spindle measures 1000 mm from the bottom of the leaf

11. Latch Keep	
Manufacturer	Eurospec
Reference	TLS8030SC
Material	Stainless Steel
Centre Keep Plate	65 mm high x 25 mm wide x 1.2 mm thick
Fixing method	Woodscrews No. 2 at 5 Ømm x 20 mm
Details of intumescent protection	
I. Centre Strike Plate and Keep	1 mm Interdens
II. Interruptions to Intumescent within the frame reveal	Fully interrupted

United Kingdom Testing and Certification is a trading style of United Kingdom Testing & Certification Limited. Registered company number SC654601

12. Lever handles	
Manufacturer	Eurospec
Reference	CSL1194 Grade 304
Quantity	1
Material	Polished Stainless Steel
Overall size	52 Ømm concealed fix rose,8mm thick press on rose,19 Ømm lever handle,66mm overall projection & 137 mm overall lever length
Fixing method, fixing material, sizes, quantity, and location	No.2 Bolt through fixings male/ female 3 Ømm x 60 mm, 4 mm x 60 mm sleeve
Details of intumescent protection	N/a
Escutcheon	52 Ø mm covers on handles secured on with threaded fixing

United Kingdom Testing and Certification is a trading style of United Kingdom Testing & Certification Limited. Registered company number SC654601

A.1.2 Specimen B

13. Door frame	
Manufacturer	SA Joinery
Reference	FD60
Material	Sapele Head and Sapele Jambs
Density	620 - 660 kg/m^3
Moisture content	12- 14%[14]
Overall size	930 mm x 2040 mm
Frame (Head)	95 mm wide x 42 mm thick with 39 mm wide x 15 mm deep rebate
Frame (Jambs)	95mm wide x 42 mm thick with 39 mm wide x 15mm deep rebate
Jamb to Head jointing method, fixing detail and location	Stub Tenon @ 16 mm x 16 mm x 32 mm fixed with 5 Ømm X 100 mm Wood Screws no. 2 on each head to jamb connection
Stop to Frame jointing method, fixing detail and location	N/a
Presence of Adhesives	N/a

14. Frame Fixing Method to Supporting Construction	
Manufacturer	SPAX International GmbH & CO. KG
Type & material	Single Thread Screws & Hardened Steel
Overall size	5 Ømm x 80 mm long
Spacing	150 mm from top corner of jamb, 150 mm from bottom corner of jamb and at no more than 600 mm centres
Does the fixing penetrate intumescent seal within frame reveal	No
Packing Material	Certitek PVC U Shims
Packing Material Dimension	101 mm x 43 mm assorted thicknesses
Packing Material Location	At each fixing location

[14] Benefits & Availability of Sapele Lumber (sapeleoutlet.com)

15. Intumescent to frame reveal	
Quantity	2
Manufacturer	Firestop Manufacturing
Reference	Fire Only Seal
Material	Graphite encased in Pvc
Overall section size	15 mm wide x 4 mm thick 10 mm spacing
Application method	Self-adhesive
Location (relative to the opening face of the door leaf)	6mm from closing edge , 10mm from frame edge
Presence of Adhesives	N/a (other than self-adhesive strips)
Reference	Isover Insulation
Thickness	50 mm
Locations	Centrally located in the wall & at the free edges of the testing frame to the wall frame
Additional Wall Construction Requests	N/a

16. Frame to supporting construction fire stopping detail	
Manufacturer	Saint-Gobain
Reference	Isover Insulation
Material	Mineral Wool
Overall dimension	50 mm
Application method	Compression fitted

United Kingdom Testing and Certification is a trading style of United Kingdom Testing & Certification Limited. Registered company number SC654601

17. Sealant to fire stopping detail	
Manufacturer	Britchem Limited
Reference	FR Acrylic Sealant
Material	Acrylic Sealant
Overall section size	10 mm deep x various widths given in section 3.1
Application method	Using a cartridge gunned
Location	Gaps between the head and jambs and supporting construction

18. Door Leaf	
Manufacturer (blank)	SA Joinery
Reference	Streboard FD30
Quantity of leaves on door set	1
Glazing location relative to the head and closing edge	N/a
Overall leaf size supplied for testing	857 mm wide x 2040 mm high x 54 mm thick

19. Core element	
Manufacturer	Falcon Panel Products
Reference	Strebord 54
Material	Graduated Density Chipboard
Density	530-630 kg/m^3
Overall thickness and reduced thickness if door leaf incorporates fielded areas	54 mm thick

United Kingdom Testing and Certification is a trading style of United Kingdom Testing & Certification Limited. Registered company number SC654601

20. Lipping's / Edge banding	
Manufacturer	S A Joinery
Reference	Door Lipping
Material	Hardened Sapele
Density	640 kg/m^3 *
Moisture content	13% *
Overall size	54mm wide x 8mm thick x 2000mm long
Fixing method	Adhesive
Location	Vertical edges only
Adhesives	Yes
Manufacturer	ARO-BOND
Type	MCPU
Reference	947
Curing method	Flush Trim
Application method	Damp cloth over area apply PU with Spatula
Presence of Mechanical Fixings	No

United Kingdom Testing and Certification is a trading style of United Kingdom Testing & Certification Limited. Registered company number SC654601

21. Hinges	
Supplier	Royde & Tucker
Reference	RT HI-LOAD 102
Quantity	3
Primary material	Zinc Plate
Type	Triple Knuckle Hinge
Size	
I. Knuckle	14Ø mm x 90 mm high
II. Blades	100 mm high x 88 mm wide x 3 mm thick
Fixings	
I. Type	Wood Screws
II. Material	Stainless Steel
III. Sizes	5Ø mm x 32 mm long
IV. Number off per blade	5
Position of each hinge relative to the head of the leaf	225 mm, 975 mm & 1725 mm
Details of intumescent protection	HP102 intumescent hinge pads
Interruptions to Intumescent within the frame reveal	Fully Interrupted

United Kingdom Testing and Certification is a trading style of United Kingdom Testing & Certification Limited. Registered company number SC654601

22. Latch	
Manufacturer	Eurospec
Reference	TLS8030SC
Material	
I. Forend plate	Satin Chrome
II. Latch bolt	Stainless Steel
Overall sizes	
I. Forend plate	60 mm high x 25 mm wide x 1.5 mm thick
II. Back case	77 mm Long x 34 mm Wide x 17 mm thick
III. Latch bolt	30 mm wide x 17 mm projection
Fixing method	2 No. Wood screws at 5 Ømm x 20mm
Operation of latch bolt	90° CW turn / Unlatched
Details of intumescent protection	
I. Forend plate	1 mm Interdens
II. Interruptions to Intumescent within the frame reveal	Fully Interrupted
Location of centre of the spindle relative to the bottom of the leaf	Centre of the spindle measures 1000 mm from the bottom of the leaf

23. Latch Keep	
Manufacturer	Eurospec
Reference	TLS8030SC
Material	Stainless Steel
Centre Keep Plate	65 mm high x 25 mm wide x 1.2 mm thick
Fixing method	Woodscrews No. 2 at 5 Ømm x 20 mm
Details of intumescent protection	
Centre Strike Plate and Keep	1 mm Interdens
Interruptions to Intumescent within the frame reveal	Fully interrupted

United Kingdom Testing and Certification is a trading style of United Kingdom Testing & Certification Limited. Registered company number SC654601

24. Lever handles	
Manufacturer	Eurospec
Reference	CSL1194 Grade 304
Quantity	1
Material	Polished Stainless Steel
Overall size	52 Ømm concealed fix rose,8mm thick press on rose,19 Ømm lever handle,66mm overall projection& 137mm overall lever length
Fixing method, fixing material, sizes, quantity, and location	No.2 Bolt through fixings male/ female 3 Ømm x 60 mm, 4 mm x 60 mm sleeve
Details of intumescent protection	N/a
Escutcheon	52 Ømm covers on handles secured on with threaded fixing

United Kingdom Testing and Certification is a trading style of United Kingdom Testing & Certification Limited. Registered company number SC654601

A.1.3 Specimen C

25. Horizontal Joint	
Overall size of cavity	1000mm Long x 50mm wide x 3040mm deep
Details of cavity facings	Simulated frame section (1000 mm Long x 150 mm Width) and steel stud (Libra Stud 1000 mm Long x 50 mm Width x 34 mm x 32 mm Thick)
Location	Above Doorset A 2300 mm from ground level

26. Sealant	
Manufacturer	Britchem Limited
Reference	FR Acrylic Sealant
Material	Acrylic
Overall section size of sealant	20 mm wide x 1000 mm high x 10 mm deep
Application method	Cartridge gunned at both faces

27. Backing Material	
Manufacturer	Saint-Gobain
Reference	Isover Insulation
Material	25 Kg Mineral Wool
Overall size	20 mm wide x 1000 mm high x 50 mm deep
Application method	Friction fitted with cavity

28. Simulated Frame Section	
Manufacturer	Supplied by UKTC
Material	MDF
Overall size	30 mm wide x 1000 mm high x 100 mm deep
Fixing method	Screw fixed at 250 mm centres and 50 mm from edge with Timco Drywall screws 4 Ømm x 75mm

United Kingdom Testing and Certification is a trading style of United Kingdom Testing & Certification Limited. Registered company number SC654601

A.1.4 Specimen D

29. Vertical Joint	
Overall size of cavity	50 mm wide x 1000 mm high x 3040 mm deep
Details of cavity facings	Simulated frame section (1000 mm Long x 150 mm Width) and steel stud (Libra Stud 1000 mm Long x 50 mm Width x 34 mm x 32 mm Thick)
Location	200 mm from both door leaf's & 1800 mm from ground level

30. Sealant	
Manufacturer	Britchem Limited
Reference	FR Acrylic Sealant
Material	Acrylic
Overall section size of sealant	20 mm wide x 1000 mm high x 10 mm deep
Application method	Cartridge gunned at both faces

31. Backing Material	
Manufacturer	Saint-Gobain
Reference	Isover Insulation
Material	Mineral Wool
Overall size	20 mm wide x 1000 mm high x 50 mm deep
Application method	Friction fitted with cavity

32. Simulated Frame Section	
Manufacturer	Supplied by UKTC
Material	MDF
Overall size	30 mm wide x 1000 mm high x 100 mm deep
Fixing method	Screw fixed at 250 mm centres and 50 mm from edge with Timco Drywall screws 4 Ømm x 75 mm

United Kingdom Testing and Certification is a trading style of United Kingdom Testing & Certification Limited. Registered company number SC654601

A.1.5 Supporting Construction

33. Supporting Wall Frame Details	
Supplier	UKTC Provided
Wall Supporting Structure (Frame)	
I. Manufacturer	Libra Systems UK
II. Type & Material	Steel C Stud
III. Thickness & Size	50 mm Wide x 34 mm Thick x 3200 mm Long
IV. Centres	600 mm Centres 20 mm Space between Testing Frame and Wall Frame for Insulation
Additional Wall Construction Requests	N/a

34. Plasterboard	
Manufacturer	Gypsum Saint-Gobain
Type & material	Gypsum Gyproc FireLine Plasterboard Tapered Edge
Layer Quantity	2
Thickness & Sheet Size	12.5 mm Per Layer 25 mm Total & 2400 mm x 1200 mm Per Sheet
Fixings	Plasterboard Screw Fixings 5 Ømm x 25 mm
Joints Filled & Taped With	Filled with Gyproc ProMix Lite & Gyproc Fire Strip

35. Wall Insulation	
Manufacture	Saint-Gobain
Type & material	Mineral Wool
Installation Method	Compression fitted
Reference	Isover Insulation
Thickness	50 mm
Locations	Centrally located in the wall & at the free edges of the testing frame to the wall frame

United Kingdom Testing and Certification is a trading style of United Kingdom Testing & Certification Limited. Registered company number SC654601

A.2 General Arrangement

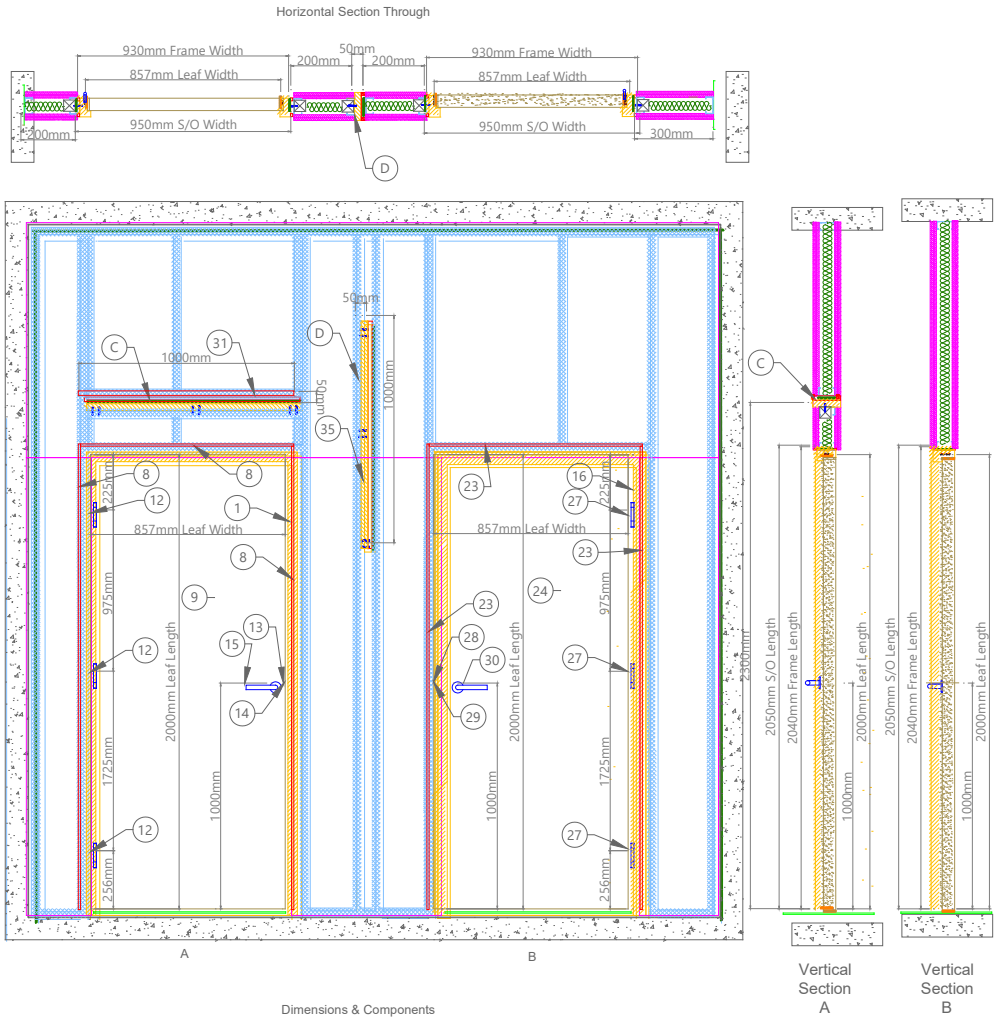

A.3 Vertical Sections – Specimen A & B

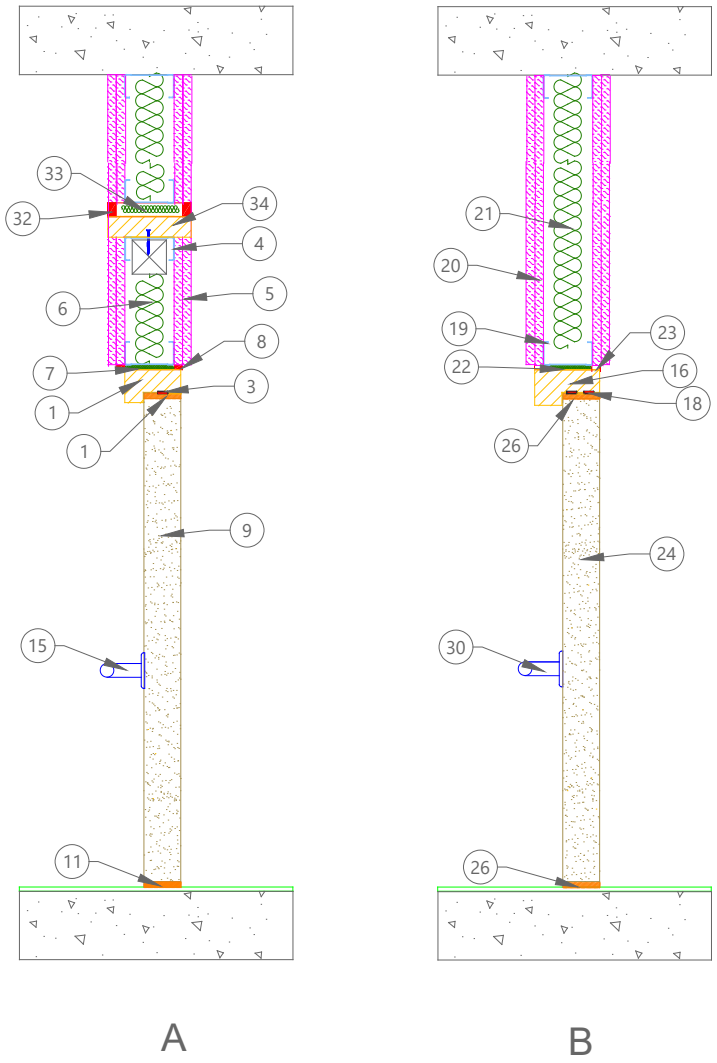

A.4 Horizontal Sections – Specimen A & B

Specimen A

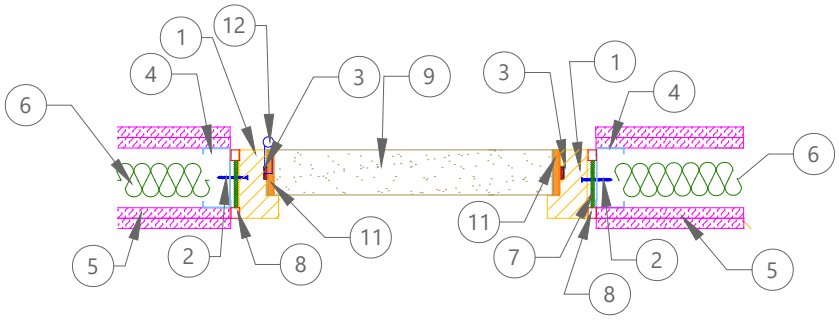

Specimen B

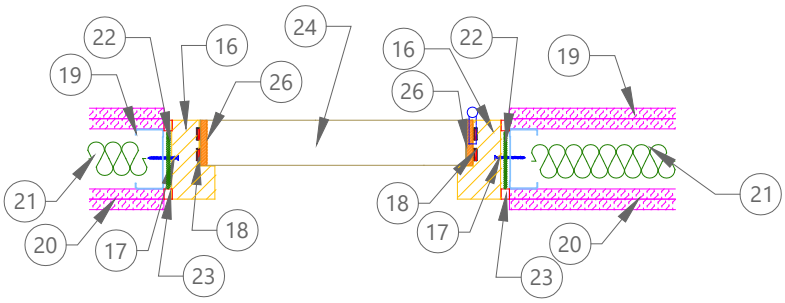

A.5 Fire Stopping Detail Specimen A & B

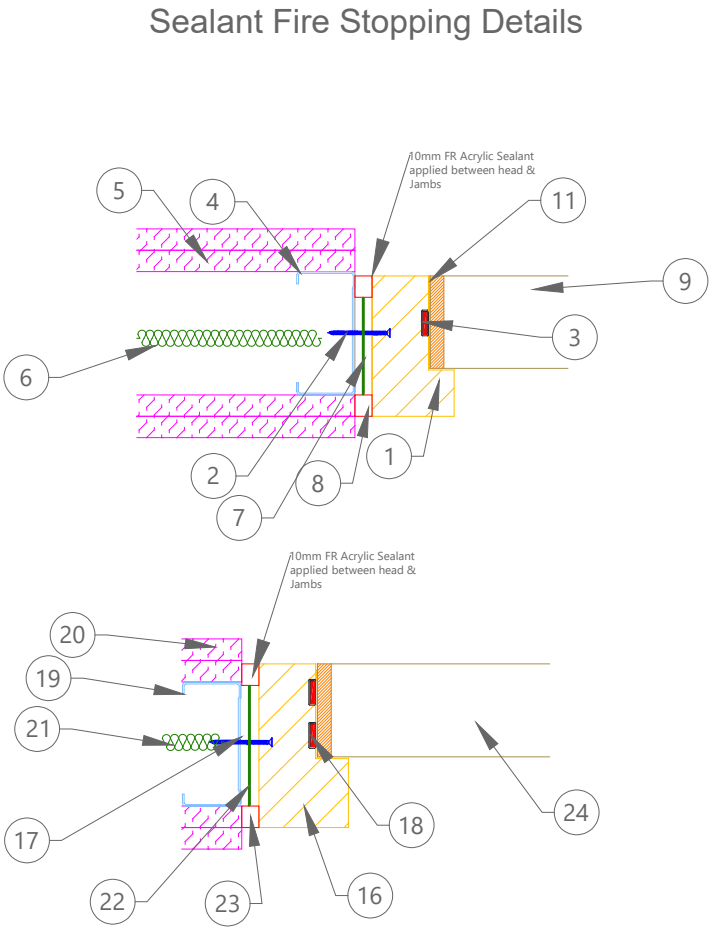

A.6 Sections through of Specimen C & D

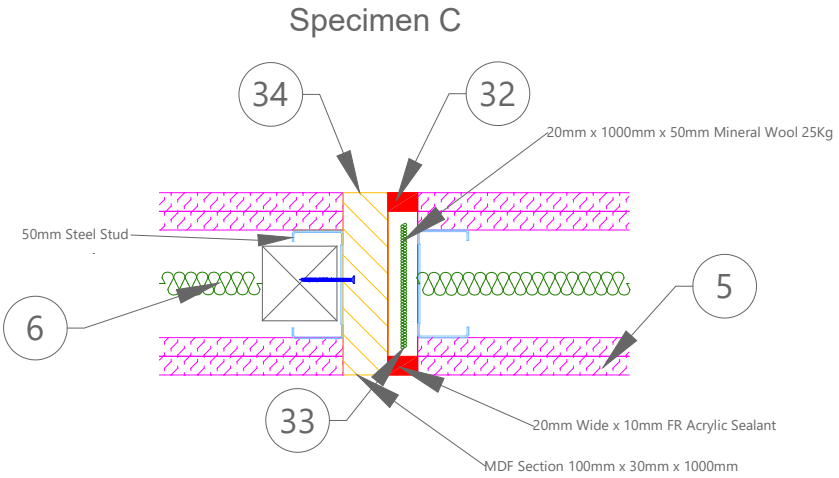

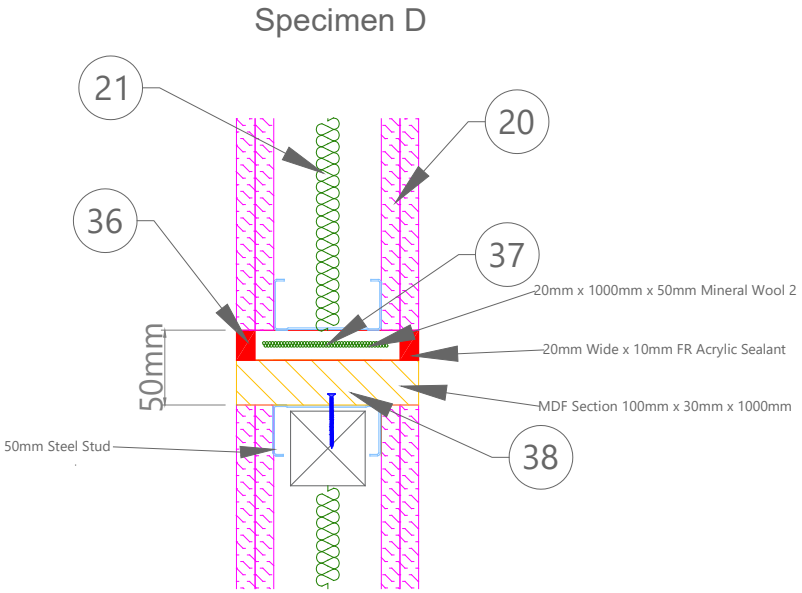

A.7 Instrumentation

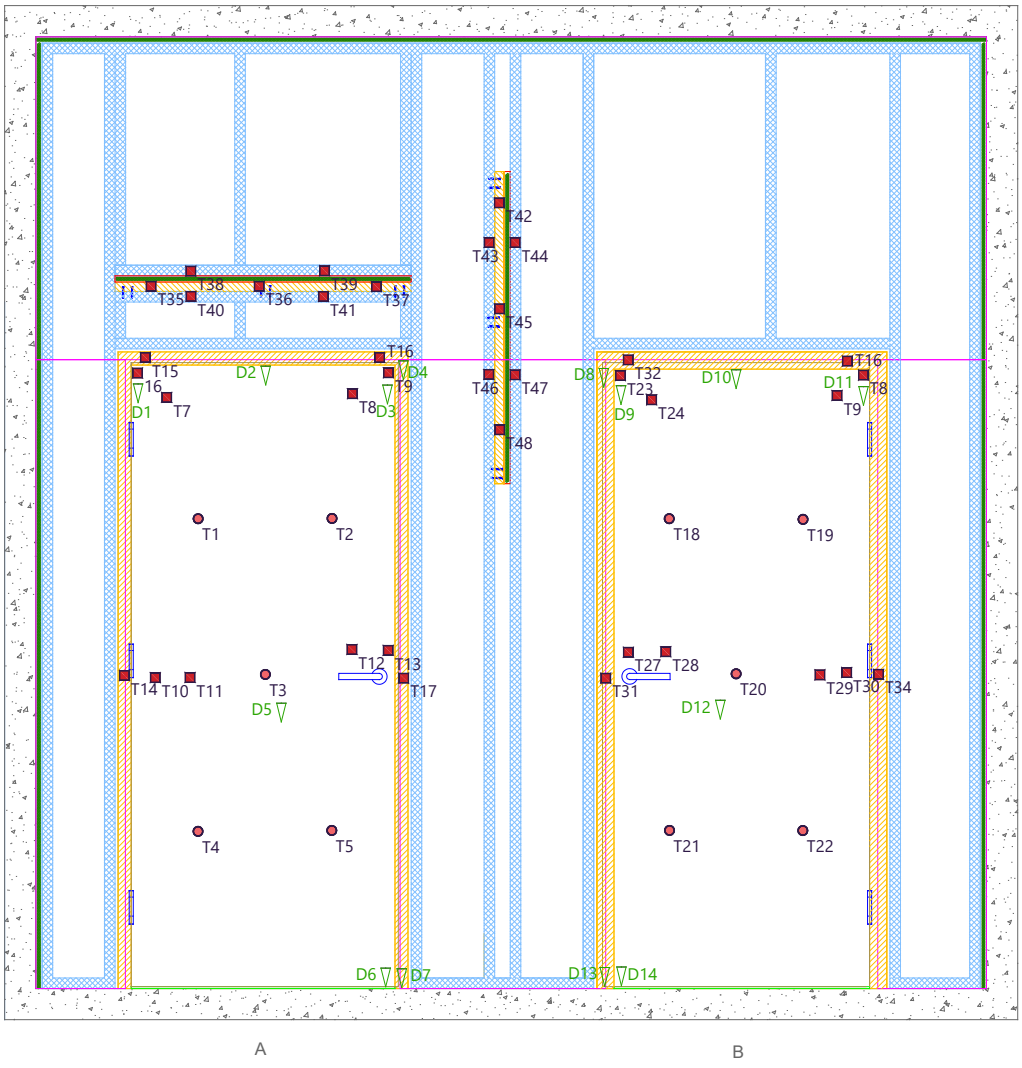

Thermocouples & Deflections

Appendix B

B.1 Unexposed Surface Temperature Measurements

Legend	
*	Instrument not in use
**	Instrument Malfunction

Time (mins)	Mean	TC1	TC2	TC3	TC4	TC5
0	8	8.0	8.1	7.4	8.0	7.7
1	8	8	8	8	8	8
2	8	8	8	8	8	8
3	8	8	8	7	8	8
4	8	8	8	7	8	8
5	8	8	8	7	8	8
6	8	8	8	7	8	8
7	8	8	8	8	8	8
8	8	8	8	8	8	9
9	8	8	8	8	8	9
10	8	8	8	8	8	9
11	9	9	9	8	9	9
12	9	9	10	9	9	10
13	10	10	10	9	10	11
14	11	11	11	10	11	11
15	12	13	12	11	12	13
16	13	14	13	11	14	14
17	14	15	14	12	15	15
18	16	16	16	13	16	16
19	17	18	17	14	18	18
20	18	19	18	15	19	19
21	20	20	20	16	20	21
22	21	22	22	18	22	23
23	23	24	23	19	24	25
24	25	25	25	21	25	27
25	26	27	27	23	27	28
26	27	28	28	24	28	29
27	29	29	30	25	29	31
28	30	31	32	27	30	32
29	32	33	34	29	32	34
30	34	34	36	30	33	35
31	36	36	38	32	35	37
32	37	37	40	34	36	39
33	39	39	42	36	37	40
34	41	41	44	38	39	42

Time (mins)	Mean	TC1	TC2	TC3	TC4	TC5
35	42	43	46	39	41	43
36	44	44	48	41	42	45

Time (mins)	TC6	TC7	TC8	TC9	TC10	TC11	TC12	TC13
0	8	8	8	9	8	8	8	9
1	8	8	8	9	8	8	8	21
2	8	8	8	8	8	8	8	26
3	8	8	8	9	8	8	8	33
4	8	8	8	9	9	8	8	34
5	8	8	8	9	9	8	8	36
6	8	8	8	17	10	8	8	35
7	8	8	9	31	10	8	9	40
8	8	8	9	33	11	8	9	40
9	9	8	9	36	11	8	9	43
10	11	9	10	34	12	8	9	40
11	13	11	11	35	13	9	10	42
12	16	13	13	34	15	9	12	44
13	20	15	15	35	17	10	14	46
14	24	17	16	36	19	11	15	45
15	28	19	19	37	23	12	17	48
16	31	22	21	39	26	13	18	49
17	35	24	23	42	29	14	19	51
18	38	26	24	44	32	15	22	55
19	42	27	26	47	36	16	24	59
20	45	29	28	48	39	17	25	62
21	48	30	30	51	42	19	28	68
22	52	32	32	57	45	20	30	76
23	55	34	34	59	47	21	32	85
24	59	36	36	63	50	23	34	96
25	61	37	38	63	51	24	36	107
26	64	38	39	65	52	25	37	123
27	66	40	41	67	54	27	39	141
28	68	41	42	69	55	28	41	158
29	69	43	45	72	57	30	43	182
30	71	44	46	71	58	32	46	198
31	72	46	47	71	59	34	47	117
32	74	47	49	73	60	35	49	93
33	76	49	51	74	61	37	50	84
34	76	50	52	74	62	39	52	80
35	75	51	53	75	63	41	53	78
36	76	52	55	78	64	43	55	78

United Kingdom Testing and Certification is a trading style of United Kingdom Testing & Certification Limited. Registered company number SC654601

Time (mins)	TC14	TC15	TC16	TC17
0	8	7	8	8
1	8	7	7	11
2	7	7	7	14
3	7	8	7	14
4	7	7	7	15
5	7	7	7	14
6	8	7	10	12
7	8	8	17	11
8	8	8	24	12
9	8	8	26	13
10	8	8	27	13
11	8	9	26	14
12	9	10	25	14
13	9	11	25	16
14	10	14	25	17
15	11	13	25	20
16	12	14	26	21
17	13	16	27	23
18	14	18	26	25
19	15	19	26	27
20	16	20	27	28
21	17	23	27	30
22	19	25	27	32
23	20	27	29	33
24	21	28	29	34
25	22	29	30	36
26	23	30	30	36
27	24	31	32	38
28	25	32	33	38
29	27	33	35	39
30	27	34	36	39
31	29	35	38	40
32	29	38	39	42
33	30	40	40	43
34	31	41	41	45
35	32	40	42	46
36	33	41	42	47

United Kingdom Testing and Certification is a trading style of United Kingdom Testing & Certification Limited. Registered company number SC654601

Time (mins)	Mean	TC18	TC19	TC20	TC21	TC22
0	8	8	8	8	8	7
1	8	8	8	8	8	8
2	8	9	9	9	8	8
3	8	9	9	9	8	8
4	9	9	9	9	9	8
5	9	9	9	9	9	8
6	9	9	9	9	9	8
7	9	9	9	9	9	8
8	9	9	9	9	10	9
9	9	9	9	9	10	9
10	9	9	9	9	10	9
11	9	9	9	9	10	9
12	9	9	9	9	10	9
13	9	9	9	9	10	10
14	9	10	9	9	10	10
15	10	10	10	10	10	11
16	10	10	10	10	10	11
17	11	10	10	10	11	11
18	11	11	11	11	11	12
19	11	11	11	11	11	13
20	12	12	12	11	12	13
21	12	12	12	12	12	14
22	13	13	13	12	13	15
23	14	14	14	13	13	16
24	15	14	14	14	15	17
25	16	15	15	15	16	18
26	16	16	16	15	16	18
27	17	17	17	16	16	19
28	18	17	18	17	17	20
29	19	18	18	17	18	21
30	19	19	19	18	19	22
31	20	20	20	19	19	23
32	21	21	21	20	20	23
33	22	22	22	21	21	24
34	23	23	24	22	22	25
35	24	24	25	23	23	26
36	25	26	26	24	24	27
37	26	26	27	26	25	28
38	27	27	28	26	25	28
39	28	28	29	27	26	29
40	29	29	30	29	28	30
41	31	31	32	30	29	32
42	32	32	33	32	30	33
43	33	34	34	33	31	35

United Kingdom Testing and Certification is a trading style of United Kingdom Testing & Certification Limited. Registered company number SC654601

Time (mins)	Mean	TC18	TC19	TC20	TC21	TC22
44	35	35	36	34	33	36
45	36	36	37	35	34	37
46	37	38	38	37	35	38
47	39	40	40	39	37	39
48	40	41	42	40	38	41
49	42	42	43	42	40	42
50	43	44	44	43	41	43
51	45	46	46	45	43	45
52	47	48	48	47	45	47
53	49	50	49	49	47	49
54	51	52	52	52	50	51
55	53	54	53	53	51	53
56	55	56	55	56	53	55
57	56	58	57	57	55	56
58	58	59	59	59	56	58
59	60	61	60	60	58	60
60	62	63	62	62	60	61
61	63	65	64	64	62	63
62	66	66	66	67	65	65
63	67	67	67	67	65	66
64	68	69	68	69	67	68
65	70	71	70	71	70	69
66	71	72	71	72	70	71
67	73	73	73	74	73	72
68	74	74	74	74	74	74
69	102	76	204	76	77	75

Time (mins)	TC23	TC24	TC25	TC26	TC27	TC28	TC29
0	8	12	8	8	8	8	7
1	8	37	12	10	9	8	8
2	8	52	17	16	10	8	11
3	8	47	15	21	10	8	17
4	9	46	13	23	10	8	20
5	8	49	13	24	10	8	24
6	9	49	12	23	10	9	21
7	9	48	12	22	10	9	20
8	9	47	11	21	11	9	19
9	9	45	11	20	11	9	18
10	9	46	11	20	10	9	16
11	9	43	11	20	11	9	16
12	9	42	11	20	11	9	16
13	9	41	11	20	12	10	15

United Kingdom Testing and Certification is a trading style of United Kingdom Testing & Certification Limited. Registered company number SC654601

Time (mins)	TC23	TC24	TC25	TC26	TC27	TC28	TC29
14	9	41	12	20	12	10	15
15	10	41	12	20	13	10	16
16	10	41	13	21	14	10	16
17	11	41	13	22	14	11	17
18	12	42	14	22	15	11	17
19	13	42	16	23	16	12	19
20	14	43	17	24	16	12	19
21	15	44	18	25	17	13	20
22	16	45	19	26	18	14	22
23	17	47	20	27	19	15	23
24	18	49	22	28	20	15	24
25	19	50	23	29	21	16	26
26	20	51	24	31	22	17	27
27	22	53	25	32	24	17	28
28	23	54	26	34	25	18	29
29	24	55	27	35	26	19	30
30	25	57	28	37	27	20	31
31	26	58	30	38	28	21	32
32	27	59	31	39	29	22	34
33	28	60	32	41	30	22	36
34	29	61	33	41	32	23	38
35	30	61	34	42	33	24	39
36	31	61	35	44	35	25	40
37	32	63	36	45	35	27	42
38	33	64	37	47	36	28	43
39	34	65	38	49	37	29	45
40	35	66	40	50	38	30	46
41	36	67	41	52	39	32	48
42	37	67	42	54	40	33	49
43	38	69	43	55	41	34	50
44	39	69	44	56	42	36	52
45	40	69	45	58	43	37	53
46	42	70	46	59	44	39	54
47	43	70	47	60	45	40	55
48	44	70	48	61	46	42	57
49	45	70	49	63	47	43	58
50	45	71	50	64	48	45	59
51	47	72	52	65	49	47	61
52	49	73	53	67	51	49	62
53	50	75	54	69	52	51	63
54	51	78	55	71	54	53	64
55	53	81	57	71	55	55	66
56	54	86	58	73	56	57	67
57	55	92	60	74	58	59	68

United Kingdom Testing and Certification is a trading style of United Kingdom Testing & Certification Limited. Registered company number SC654601

Time (mins)	TC23	TC24	TC25	TC26	TC27	TC28	TC29
58	56	101	61	75	58	60	69
59	58	112	63	76	60	62	70
60	59	115	65	77	62	64	71
61	60	100	66	78	63	66	72
62	61	97	67	79	65	67	74
63	62	97	69	79	66	69	75
64	63	98	70	80	68	70	76
65	65	101	72	81	70	71	77
66	65	105	74	83	71	73	78
67	67	111	75	84	72	74	79
68	68	62	76	85	74	76	80
69	70	38	63	86	75	69	72

Time (mins)	TC30	TC31	TC32	TC33
0	8	8	9	8
1	8	8	14	8
2	9	8	19	9
3	9	8	27	9
4	9	8	29	10
5	9	8	31	10
6	9	9	30	10
7	9	11	30	10
8	9	11	30	10
9	9	10	30	10
10	9	10	30	9
11	9	9	31	9
12	9	10	32	10
13	9	10	32	11
14	9	10	31	12
15	9	10	32	15
16	10	11	33	17
17	10	11	32	20
18	10	12	33	22
19	10	12	34	24
20	10	13	33	25
21	11	14	33	26
22	11	14	33	28
23	12	15	33	29
24	12	16	32	34
25	12	17	32	35
26	13	18	32	32
27	14	18	32	33

United Kingdom Testing and Certification is a trading style of United Kingdom Testing & Certification Limited. Registered company number SC654601

Time (mins)	TC30	TC31	TC32	TC33
28	14	19	32	32
29	14	22	33	34
30	15	25	33	33
31	16	26	33	34
32	16	27	33	34
33	17	28	34	34
34	18	28	33	34
35	18	27	32	35
36	18	27	32	35
37	19	27	32	36
38	19	27	33	36
39	20	27	34	36
40	20	28	33	37
41	20	28	33	37
42	21	29	34	37
43	22	29	34	38
44	22	29	34	38
45	22	30	34	38
46	23	31	33	39
47	23	31	34	39
48	24	32	34	40
49	24	33	34	39
50	25	33	34	40
51	25	34	34	41
52	26	35	35	41
53	27	36	35	42
54	28	37	36	43
55	28	38	38	43
56	29	40	40	43
57	30	43	44	44
58	30	46	47	44
59	31	48	52	45
60	32	49	60	45
61	32	50	53	46
62	33	51	52	47
63	34	52	52	47
64	35	54	54	48
65	35	56	58	49
66	36	60	66	49
67	37	62	68	50
68	38	68	69	51
69	38	71	50	47

United Kingdom Testing and Certification is a trading style of United Kingdom Testing & Certification Limited. Registered company number SC654601

Time (mins)	TC42	TC43	TC44	TC45	TC46	TC47	TC48
0	8	8	7	8	8	7	8
1	8	8	7	8	8	7	8
2	8	8	7	8	8	7	8
3	8	8	7	8	8	7	8
4	8	8	7	8	8	7	8
5	8	8	7	8	8	7	8
6	8	8	7	8	8	8	8
7	8	9	8	9	9	8	8
8	9	9	8	9	9	8	8
9	9	9	8	9	8	8	8
10	9	9	9	9	9	9	8
11	9	9	10	9	9	11	8
12	9	10	11	9	9	16	9
13	9	10	14	9	9	23	9
14	10	11	19	9	9	32	10
15	10	11	25	10	10	40	11
16	11	12	32	10	10	47	13
17	12	13	39	10	10	52	14
18	14	14	45	11	10	56	16
19	15	16	50	12	11	59	18
20	17	17	55	12	11	60	20
21	18	19	59	13	12	62	21
22	20	20	62	15	13	65	23
23	22	22	65	16	13	66	25
24	24	24	68	18	14	69	27
25	26	25	70	19	14	69	28
26	27	27	71	19	15	70	29
27	29	29	73	20	15	71	30
28	31	30	73	22	16	72	31
29	32	32	74	23	17	73	32
30	34	34	74	25	18	72	33
31	35	35	75	26	20	73	34
32	37	37	75	27	21	73	35
33	38	39	75	28	22	73	36
34	40	40	75	30	23	73	36
35	41	41	75	31	24	73	37
36	42	43	74	32	26	73	38
37	43	44	74	34	27	73	39
38	45	45	74	35	28	72	39
39	46	45	73	36	30	72	40
40	47	47	73	37	31	73	41
41	48	47	72	38	32	72	41
42	49	48	72	40	34	72	42
43	50	49	72	41	36	72	42

Time (mins)	TC42	TC43	TC44	TC45	TC46	TC47	TC48
44	51	50	71	42	39	71	42
45	52	50	71	44	43	71	43
46	53	51	71	45	45	71	44
47	54	51	71	44	41	71	45
48	54	51	72	45	41	71	45
49	55	51	72	46	41	71	46
50	56	52	73	47	42	71	47
51	57	52	74	49	43	73	48
52	59	53	75	51	43	74	48
53	60	54	76	52	44	75	49
54	62	55	78	54	45	76	50
55	63	55	78	56	45	77	51
56	65	56	79	58	46	79	51
57	66	57	80	61	47	79	51
58	68	58	81	63	48	80	53
59	69	59	81	66	49	80	54
60	71	59	82	68	50	81	55
61	72	60	82	71	51	82	56
62	74	60	83	74	53	81	57
63	75	61	83	76	54	81	58
64	76	61	83	78	55	82	59
65	77	61	83	81	56	81	60
66	78	61	84	82	56	81	62
67	79	62	84	83	57	81	63
68	80	62	84	84	58	82	65
69	81	62	85	84	58	81	66

Time (mins)	TC35	TC36	TC37	TC38	TC39	TC40	TC41
0	8	8	8	7	8	7	9
1	8	8	8	7	8	7	9
2	8	8	8	7	8	7	9
3	8	8	8	7	8	7	9
4	8	8	8	7	8	7	9
5	8	8	8	7	8	7	9
6	8	8	8	7	8	7	9
7	8	8	9	7	8	7	10
8	8	8	9	8	8	8	10
9	8	9	10	8	9	8	11
10	8	9	9	9	10	8	10
11	8	9	9	14	16	9	11
12	9	11	10	33	25	9	12
13	9	13	10	67	37	11	13

United Kingdom Testing and Certification is a trading style of United Kingdom Testing & Certification Limited. Registered company number SC654601

Time (mins)	TC35	TC36	TC37	TC38	TC39	TC40	TC41
14	9	15	11	43	49	12	14
15	10	17	12	42	57	13	15
16	11	20	14	27	63	15	17
17	13	22	16	33	66	17	18
18	14	24	18	26	67	19	20
19	16	26	20	31	68	20	22
20	18	28	22	22	68	22	23
21	20	30	24	23	68	24	25
22	22	31	27	22	69	26	27
23	24	33	29	22	69	28	29
24	25	34	30	24	69	30	31
25	27	35	32	23	70	31	32
26	28	36	33	21	70	32	33
27	30	37	34	22	70	34	34
28	31	38	36	21	70	35	35
29	32	40	37	23	70	37	37
30	34	40	38	20	69	38	38
31	35	41	39	21	68	39	39
32	36	42	40	21	68	40	40
33	38	43	42	22	67	42	41
34	39	44	43	20	66	43	42
35	39	44	43	20	65	43	42
36	41	45	45	23	65	44	44
37	41	46	45	20	64	45	45
38	42	46	45	14	63	44	45
39	43	47	46	13	63	45	45
40	43	47	47	14	61	45	46
41	44	48	48	14	61	46	46
42	45	49	48	15	61	46	47
43	46	49	49	15	60	47	48
44	46	50	50	13	60	47	48
45	47	50	51	15	59	48	49
46	48	51	52	16	59	48	50
47	49	51	53	17	59	49	51
48	49	52	53	18	58	49	52
49	50	52	54	17	58	49	53
50	51	53	55	18	59	50	55
51	52	54	56	23	59	51	57
52	52	55	57	20	60	52	58
53	53	56	58	18	61	53	60
54	54	57	59	17	62	55	62
55	55	58	60	17	63	57	64
56	57	59	62	26	65	59	66
57	58	61	63	19	66	61	66

Time (mins)	TC35	TC36	TC37	TC38	TC39	TC40	TC41
58	60	62	65	19	67	61	67
59	62	63	67	19	68	62	68
60	63	64	69	20	68	63	70
61	65	66	71	26	69	64	71
62	67	67	74	27	71	65	72
63	69	68	75	26	71	66	73
64	70	69	76	23	71	66	73
65	72	71	78	27	73	67	75
66	76	73	80	33	73	68	77
67	82	74	83	40	76	70	78
68	93	76	84	94	77	73	80
69	101	79	86	117	77	81	81

B.2 Deflection Measurements

Legend	
*	Instrument not in use
**	Instrument Malfunction
-	Indicates movement away the heating conditions

Time (mins)	1	2	3	4	5	6	7
0	0	0	0	0	0	0	0
10	12	10	12	12	5	3	-1
20	6	6	9	6	-1	2	0
30	8	5	11	8	-7	6	1

Time (mins)	8	9	10	11	12	13	14
0	0	0	0	0	0	0	0
10	11	9	8	6	3	1	2
20	-4	6	4	3	-1	2	1
30	6	7	4	4	-1	3	4
40	12	13	7	7	0	5	6
50	31	29	19	13	-6	5	7
55	46	44	24	11	-9	5	13
60	57	57	25	9	-13	6	22
65	67	68	24	6	-17	5	23

United Kingdom Testing and Certification is a trading style of United Kingdom Testing & Certification Limited. Registered company number SC654601

Appendix C

C.1 Sample Report

IFC certification

Sample Report

This report provides a record of the information relating to samples taken by IFC Certification Limited, or its agent, for certification of the products detailed below, as defined by IFCC QP19.

IFCC Job No.	—	IFCC Notified Body No.	**1720**
Product Name/Type	FR ACRYLIC SEALANT (BRITCHEM)		
Performance Rating (as applicable)	TBC		
Manufacturer	BRITCHEM LIMITED.		
Identification of the product in accordance with the technical specification (include if applicable references to any associated drawings including issue dates and revision levels).	FR ACRYLIC SEALANT 12.5% (WHITE)		
Certificate holder if different from above	N/A		
Manufacturing site	UNIT 6, BEEHIVE BUSINESS PARK, SMITHIES LANE, HECKMONDWIKE. WEST YORKSHIRE		
Place of sampling (if different from above)	— " —		
Stock/batch quantity from which samples selected	90 BOXES of 25 TUBES (310ml) 1132kgs.		
Number/quantity of samples	1 BOX (25 TUBES) 310ml		
Part Number &/or Serial Number of product/components	BATCH NO. 17082173298 FORMULATION 04-2W		

Form No.: F82 Sample Report	Version: 1.2	Date: 09/01/2020
Written by: IL	Authorised by: IW	Page 1 of 2

IFC certification

Sample Report

If the products to be sampled were manufactured during the sampling visit record the results of any tests or inspections carried out. Were these as per the declared specifications?	BATCH TEST SHEET REVIEWED AND VALUES RECORDED WERE WITHIN SPECIFICATION. YES
Manufacturer's marks including batch no. and date of manufacture	B/N 1708213249 D.O.M 17/08/21
Sampler's identifying marks	[signature] 17TH AUG 2021
Samples to be dispatched by manufacturer to	TEST LAB
Properties to be tested	FIRE TEST
Date of sampling	17/08/2021
Comments	SAMPLED FROM PRODUCTION LINE DURING AUDIT.

Signed: .....
for and on behalf of manufacturer

Name (please print): J. ORMAN

Signed: [signature]
for and on behalf of IFC Certification

Date: 17TH AUGUST 2021

United Kingdom Testing and Certification is a trading style of United Kingdom Testing & Certification Limited. Registered company number SC654601